HCD-C70/C90

SERVICE MANUAL

US Model
Canadian Model
HCD-C70/C90
AEP Model
UK Model
E Model
Australian Model
Tourist Model
HCD-C70

HCD-C70 is the tuner CD player section in FH-C7X and MHC-C70. HCD-C90 is the tuner CD player section in MHC-C90.

Photo : HCD-C70 (AEP model)

Model Name Using Similar Mechanism	HCD-C50/C50U
CD Mechanism Type	CDM23B-5BD3
Base Unit Type	BU-5BD3

SPECIFICATIONS

Tuner/CD Player

Tuner Section

System: FM stereo, FM/AM superheterodyne tuner

FM tuner section

Tuning range: 87.5 — 108 MHz
Antenna terminals: 75 ohms unbalanced
Intermediate frequency: 10.7 MHz

AM tuner section (US, CND)

Tuning range: 530 — 1,710 kHz (with the AM tuning interval set at 10 kHz)
531 — 1,710 kHz (with the AM tuning interval at 9 kHz)
Antenna: AM loop antenna, external antenna terminals
Intermediate frequency: 450 kHz

AM tuner section (AEP, UK, G, IT)

Tuning range: AM: 531 —1,602 kHz (G)
AM: 522 —1,611 kHz (IT)
MW: 531 —1,602 kHz (AEP, UK)
LW: 153 —279 kHz (AEP, UK)
Antenna: AM loop antenna, external antenna terminals
Intermediate frequency: 450 kHz

AM tuner section (E, EA, SP, AUS, JE)

Tuning range: MW: 531 —1,602 kHz (with the MW tuning interval set at 9 kHz)
MW: 530 —1,710 kHz (with the MW tuning interval set at 10 kHz) (except the model for Middle East)
SW: 5.95 — 17.90 MHz
Antenna: AM loop antenna, external antenna terminals
Intermediate frequency: 450 kHz

CD Player Section

System: Compact disc digital audio system
Laser: Semiconductor laser
Wavelength: 780 — 790 nm
Outputs: DIGITAL OPTICAL OUT (optical output connector): wave length 660 nm, output level –18 dBm

— Continued on next page —

TUNER CD PLAYER

SONY®

Supplied accessories (Sold only by a set)
- Remote Commander (1)
- Sony SUM-3 (NS) batteries (2)
- AM loop antenna (1)
- FM antenna (1)
- Flat cord (1)

Design and specifications subject to change without notice.

Laser component in this product is capable of emitting radiation exceeding the limit for Class 1.

CLASS 1 LASER PRODUCT
LUOKAN 1 LASERLAITE
KLASS 1 LASERAPPARAT

This appliance is classified as a CLASS 1 LASER product. The CLASS 1 LASER PRODUCT MARKING is located on the rear exterior.

The following caution label is located inside the unit.

CAUTION	; INVISIBLE LASER RADIATION WHEN OPEN. AVOID EXPOSURE TO BEAM.
ADVARSEL	; USYNLIG LASERSTRÅLING VED ÅBNING NÅR SIKKERHEDSAFBRYDERE ER UDE AF FUNKTION. UNDGÅ UDS ÆTTELSE FOR STRÅLING.
VARO!	; AVATTAESSA JA SUOJALUKITUS OHITETTAESSA OLET ALTTIINA LASERSÄTEILYLLE.
VARNING	; LASERSTRÅLING NÄR DENNA DEL ÄR OPPNÅD OCH SPÄRREN ÄR URKOPPLAD.
ADVARSEL	; USYNLIG LASERSTRÅLING NÅR DEKSEL ÅPNES UNNGÅ EKSPONERING FOR STRÅLEN.

Notes on chip component replacement

- Never reuse a disconnected chip component.
- Notice that the minus side of a tantalum capacitor may be damaged by heat.

Fiexible Circuit Board Repairing

- Keep the temperature of the soldering iron around 270 °C during repairing.
- Do not touch the soldering iron on the same conductor of the circuit board (within 3 times).
- Be careful not to apply force on the conductor when soldering or unsoldering.

SAFETY-RELATED COMPONENT WARNING !!

COMPONENTS IDENTIFIED BY SHADING AND MARK ⚠ ON THE SCHEMATIC DIAGRAMS, EXPLODED VIEWS AND IN THE PARTS LIST ARE CRITICAL TO SAFE OPERATION. REPLACE THESE COMPONENTS WITH SONY PARTS WHOSE PART NUMBERS APPEAR AS SHOWN IN THIS MANUAL OR IN SUPPLEMENTS PUBLISHED BY SONY.

ATTENTION AUX COMPOSANTS RELATIFS ÁLA SÉCURITÉ!!

LES COMPOSANTS IDENTIFIÉS PAR UNE TRAME ET PAR UNE MAPQUE ⚠ SUR LES SCHÉMAS DE PRINCIPE, LES VUES EXPLOSÉES ET LES LISTES DE PIECES CONT D'UNE IMPORTANCE CRITIQUE POUR LA SÉCURITÉ DU FONCTIONNEMENT. NE LES REMPLACER QUE PAR DES COMPOSANTS SONY DONT LE NUMÉRO DE PIÉCE EST INDIQUÉ DANS LE PRÉSENT MANUEL OU DANS DES SUPPLÉMENTS PUBLIÉS PAR SONY.

MODEL IDENTIFICATION
— SPECIFICATION LABEL —

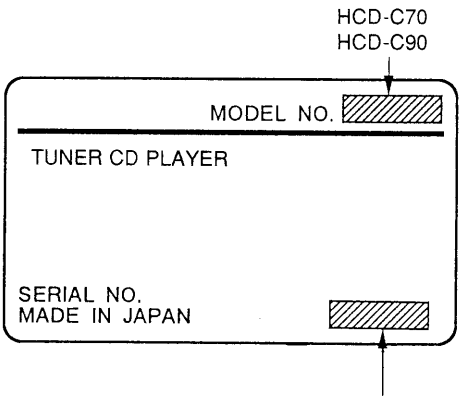

HCD-C70 (US, CND)	: 4-962-409-0□ (U/CA)
HCD-C70 (AEP, UK)	: 4-962-410-0□ (AE)
HCD-C70 (G)	: 4-962-411-0□ (AE4)
HCD-C70 (IT)	: 4-962-412-0□ (IT)
HCD-C70 (E, EA, AUS, SP, JE)	: 4-962-413-0□ (E)
HCD-C90 (US, CND)	: 4-962-415-0□ (U/CA)

Note

CND : Canadian model
G : German model
IT : Italian model
EA : Saudi Arabia model
AUS : Australian model
SP : Singapore model
JE : Tourist model

SAFETY CHECK-OUT

After correcting the original service problem, perform the following safety checks before releasing the set to the customer: Check the antenna terminals, metal trim, "metallized" knobs, screws, and all other exposed metal parts for AC leakage. Check leakage as described below.

LEAKAGE

The AC leakage from any exposed metal part to earth ground and from all exposed metal parts to any exposed metal part having a return to chassis, must not exceed 0.5 mA (500 microampers). Leakage current can be measured by any one of three methods.

1. A commercial leakage tester, such as the Simpson 229 or RCA WT-540A. Follow the manufacturers' instructions to use these instruments.

2. A battery-operated AC milliammeter. The Data Precision 245 digital multimeter is suitable for this job.

3. Measuring the voltage drop across a resistor by means of a VOM or battery-operated AC voltmeter. The "limit" indication is 0.75 V, so analog meters must have an accurate low-voltage scale. The Simpson 250 and Sanwa SH-63Trd are examples of a passive VOM that is suitable. Nearly all battery operated digital multimeters that have a 2V AC range are suitable. (See Fig. A)

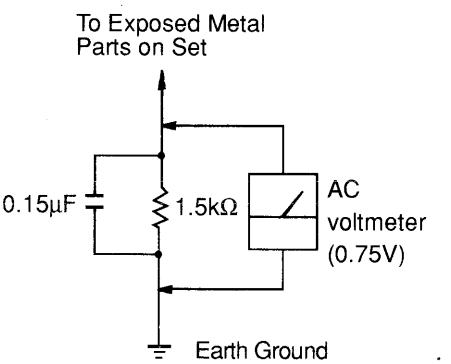

Fig. A. Using an AC voltmeter to check AC leakage.

TABLE OF CONTENTS

Section	Title	Page
SECTION 1.	SERVICE NOTE	5
SECTION 2.	GENERAL	
Parts Identification		9
SECTION 3.	DISASSEMBLY	
3-1.	Removal of Case	11
3-2.	Removal of Back Panel	11
3-3.	Removal of Main Board	11
3-4.	Removal of Front Panel Assy	12
3-5.	Removal of CD Mechanism Deck	12
SECTION 4.	ELECTRICAL ADJUSTMENTS	
4-1.	Tuner Section Adjustments	13
4-2.	CD Section Adjustments	15
SECTION 5.	IC PIN FUNCTIONS	
• IC701 Tuner/Timer Controller (TMP87CC70F-6129)		17
• IC601 CD Master Controller (75518GF-127-3B9)		18
• IC201 CD Mechanism Controller (μPD75516GF-431-3B9)		20
SECTION 6.	DIAGRAMS	
6-1.	Circuit Boards Location	23
6-2.	Block Diagram — Tuner Section —	24
6-3.	Block Diagram — Display Section —	27
6-4.	Schematic Diagram • Tuner Section	31
6-5.	Printed Wiring Board • Tuner Section	35
6-6.	Printed Wiring Board • Main Section	38
6-7.	Schematic Diagram • Main Section	41
6-8.	Schematic Diagram • Panel Section	46
6-9.	Printed Wiring Board • Panel Section	51
6-10.	Semiconductor Lead Layouts	53
SECTION 7.	EXPLODED VIEWS	
7-1.	Case, Board Section	55
7-2.	CD Mechanism Section 1 (CDM23B-5BD3)	56
7-3.	CD Mechanism Section 2 (CDM23B-5BD3)	57
7-4.	Optical Pick-up Section (BU-5BD3)	58
SECTION 8.	ELECTRICAL PARTS LIST	59

SECTION 1
SERVICING NOTE

- **POWER SUPPLIED WHILE SERVICING**

  This unit does not have its own power supply. It operates on the power supplied from the deck/amplifier (DXA-C70/C90) used by this series. Therefore connect the amplifier when servicing the unit as in electrical repairs.

  Power can also be supplied by connecting the "CDP/TC" connector of the conduction tool (PFJ-1). The following will be required to connect it.

  J-2501-063-A
  1-696-741-11 cord, (with connector)
  1-751-469-11 cord, (with connector)

  The connection to the tuner board can be checked with Pin 5 (FM-R CH) and Pin 6 (FL-L CH) of CN307.

- **MEASURING THE TUNER/TCB011 BOARDS VOLTAGE**

  Prepare the following tools (extension cables) when measuring the voltages of the TUNER and TCB011 boards.

  1) 4-pin extension cable (J-8000-026-A) × 3
  2) 8-pin extension cable (J-8000-027-A) × 1

NOTES ON HANDLING THE OPTICAL PICK-UP BLOCK OR BASE UNIT

The laser diode in the optical pick-up block may suffer electrostatic break-down because of the potential difference generated by the charged electrostatic load, etc. on clothing and the human body.

During repair, pay attention to electrostatic break-down and also use the procedure in the printed matter which is included in the repair parts.

The flexible board is easily damaged and should be handled with care.

NOTES ON LASER DIODE EMISSION CHECK

The laser beam on this model is concentrated so as to be focused on the disc reflectives surface by the objective lens in the optical pick-up block. Therefore, when checking the laser diode emission, observe from more than 30 cm away from the objective lens.

LASER DIODE AND FOCUS SEARCH OPERATION CHECK

Carry out the "S curve check" in "CD section adjustment" and check that the S curve waveform is output three times.

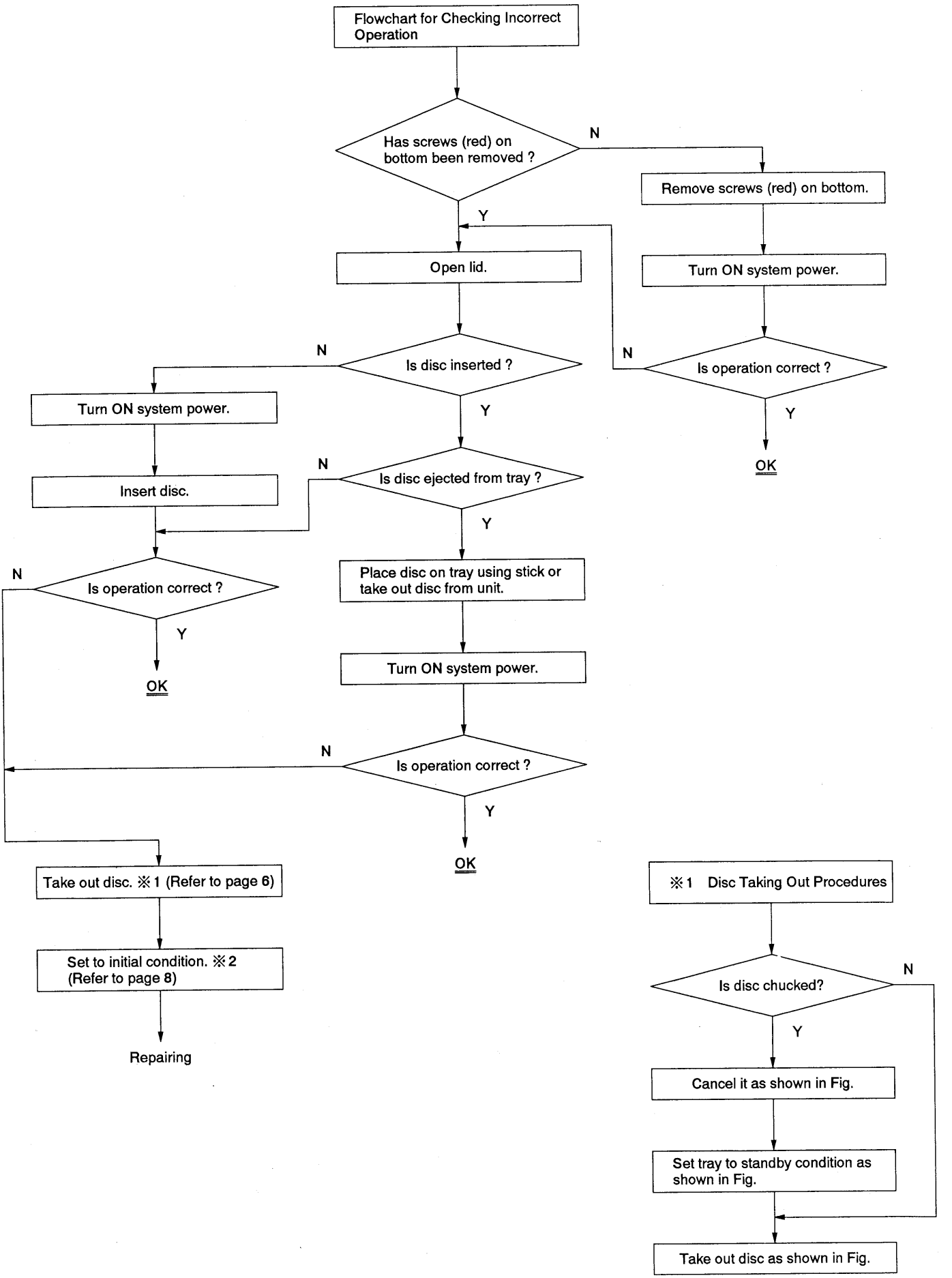
Flowchart for Checking Incorrect Operation
Has screws (red) on bottom been removed ?
N
Remove screws (red) on bottom.
Turn ON system power.
Is operation correct ?
N
Y
OK
Y
Open lid.
Is disc inserted ?
N
Turn ON system power.
Insert disc.
Y
Is disc ejected from tray ?
N
Y
Place disc on tray using stick or take out disc from unit.
Turn ON system power.
Is operation correct ?
N
Y
OK
Is operation correct ?
N
Y
OK
Take out disc. ※1 (Refer to page 6)
Set to initial condition. ※2 (Refer to page 8)
Repairing
※1 Disc Taking Out Procedures
Is disc chucked?
N
Y
Cancel it as shown in Fig.
Set tray to standby condition as shown in Fig.
Take out disc as shown in Fig.

Disc Taking Out Procedures

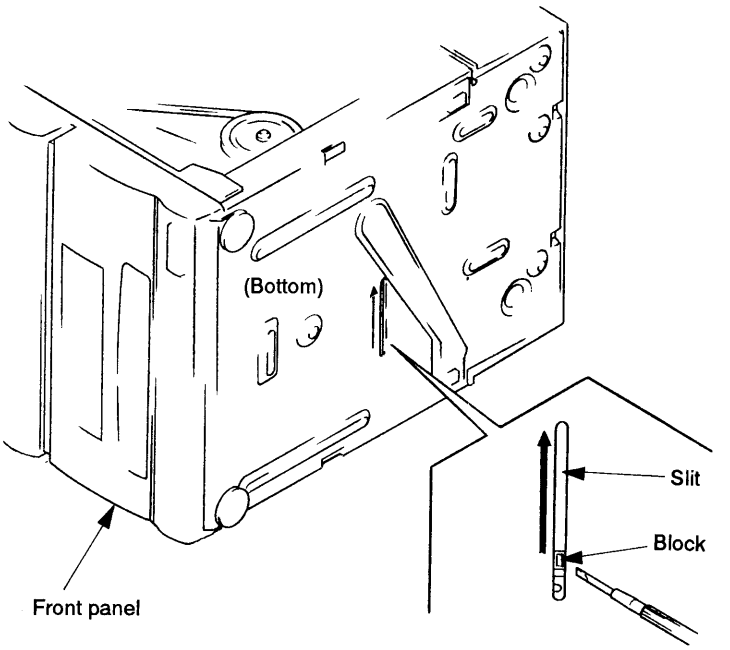

1) Insert a thin stick into the hollow of the white block and move it in the arrow direction.
(When a disc is chucked, handle the unit as follows to avoid disc removal.)

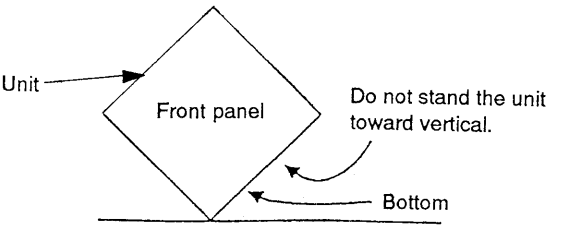

2) Turn the pulley A in the arrow ↻ direction and make sure that the disc tray moves in the arrow ⬅ direction. And further turn the pulley A until the tray aligns with other trays.

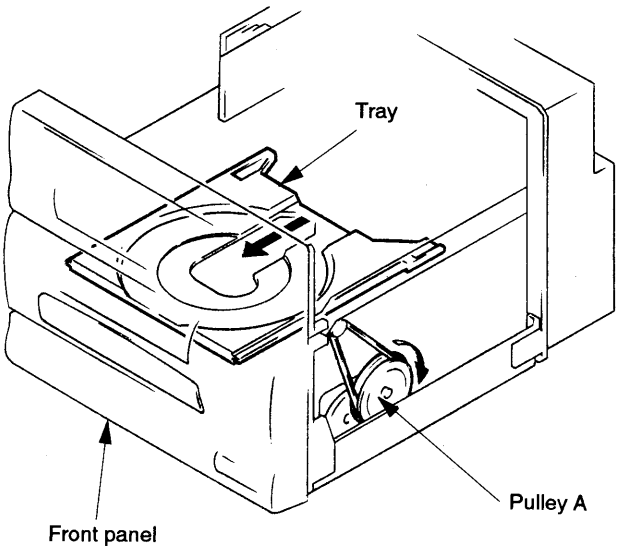

3) Open the front panel lid. Turn the pulley B to allow the stock, which has the disc tray, to go up and down until the disc inserted tray aligns with the front panel lid position .

4) Turn the pulley A in the arrow ○ direction to allow the disc inserted tray to be ejected. Take out the disc and turn the pulley A in the reverse direction to allow the disc inserted tray to align with other trays.

In case two or more trays have discs, repeat step 3) and 4).

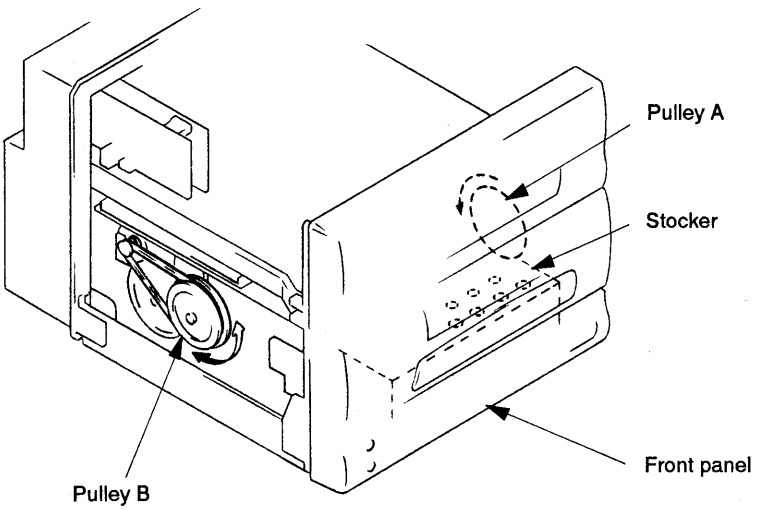

※2 Initial setting procedures

1) In case turning ON the system power supply allows the mechanism to work:
Fist, make sure that all discs have been taken out.

Open the disc No.1.
↓
Turn OFF the system power supply.
↓
Make sure that ''OFF" appears on the CD display.
↓
Blinking and character disappearing indicates setting completion.

2) In case turning ON the system power supply does not allow the mechanism to work:
Move the disc tray as shown in Fig.

Initial Setting Procedures

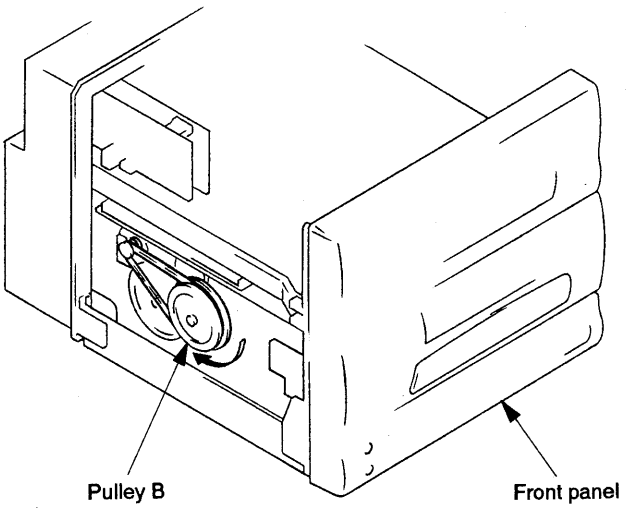

※ Make sure that all trays are in the correct positions. Turn the pulley B in the arrow direction until it stops.

SECTION 2
GENERAL

This section is extracted from instruction manual.

Parts Identification

B

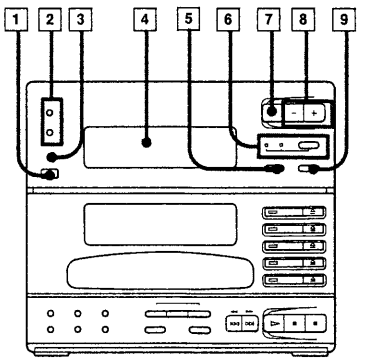

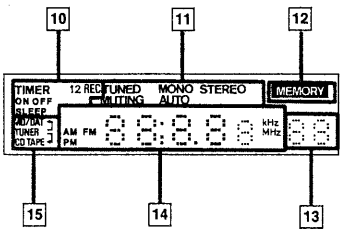

Tuner/CD Player Section

Tuner B

1 Remote control sensor
2 WAKE UP TIMER 1, 2 /CLOCK SET buttons
3 TIMER REC button
4 Display window
5 MEMORY/NEXT button
6 MODE button and TUNING/PRESET indicators
7 BAND selector
8 PRESET/TIMER –/+ buttons
9 STEREO/MONO (stereo/monaural) button

Display

10 Timer indications
11 Tuner indications
12 MEMORY indication
13 Preset station number display
14 Frequency and clock display
15 Program source/recording equipment display for timer operation

C

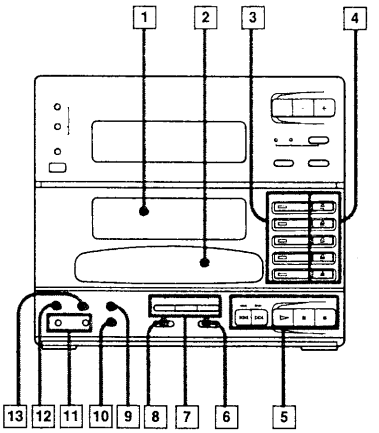

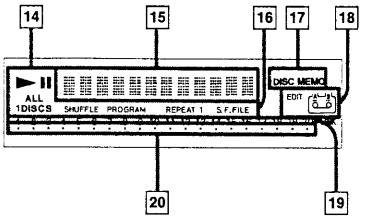

D

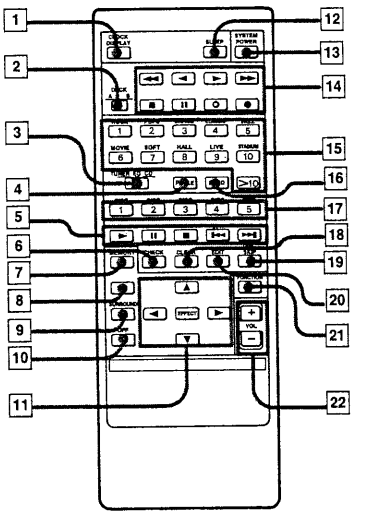

CD Player C

1 Display window
2 Disc tray door
3 DISC 1 — 5 selectors and disc tray indicators
4 OPEN/CLOSE ⏏ buttons
5 CD operation buttons
  ■: Stop button
  ❚❚: Pause button
  ▷: Play button
  ⏮◀◀ ▶▶⏭: Manual search (when kept depressed)/Automatic Music Sensor (when pressed) buttons
6 REPEAT button
7 PLAY MODE buttons
  PROGRAM button
  SHUFFLE button
  CONTINUE button
8 TIME/MEMO button
9 S.F.FILE (Sound Field File) button
10 CURSOR button
11 CHARACTER ◁/▷ buttons
12 MEMO INPUT button
13 ERASE button

Display

14 CD playing mode indications
15 CD playing time display
  Disc Memo display
16 S.F.FILE on/off indication
17 DISC MEMO on/off indication
18 CD editing mode indications
19 CD selection number display
20 Indicators for all track numbers on a CD

Remote Commander D

1 CLOCK DISPLAY button
2 DECK A/B selector
3 TUNER/EQ/CD numeric buttons function selector
4 P. FILE button
5 CD player operation buttons
6 CHECK button
7 MEMORY button
8 EQ button
9 SURROUND button
10 OFF button
11 CURSOR CONTROL buttons and EFFECT button
12 SLEEP button
13 SYSTEM POWER button
14 Cassette deck operation buttons
15 Tuner/equalizer/CD numeric buttons
16 BAND button
17 DISC 1 — 5 selectors
18 CLEAR button
19 DISC SKIP button
20 EDIT button
21 FUNCTION button
22 VOL +/– buttons

SECTION 3
DISASSEMBLY

3-1. REMOVAL OF CASE

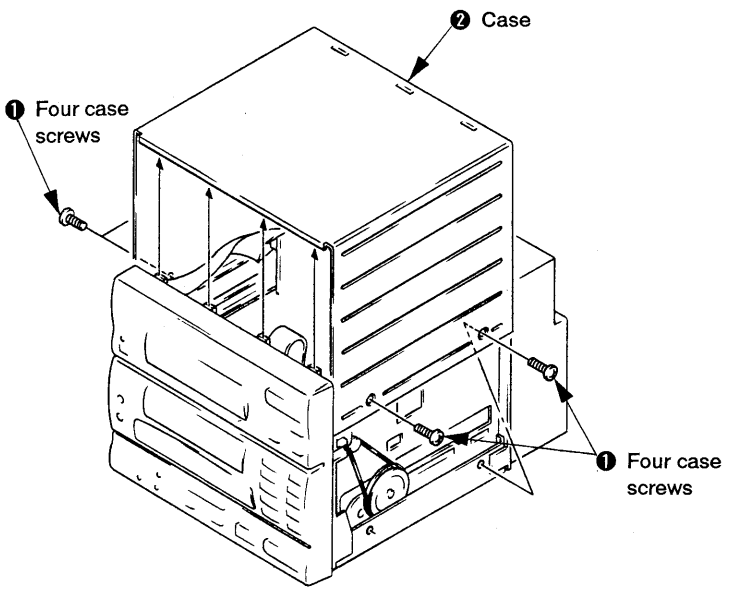

3-2. REMOVAL OF BACK PANEL

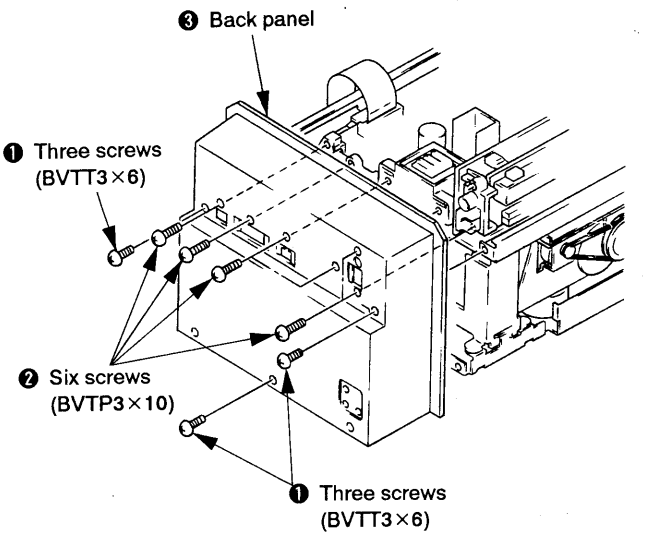

3-3. REMOVAL OF MAIN BOARD

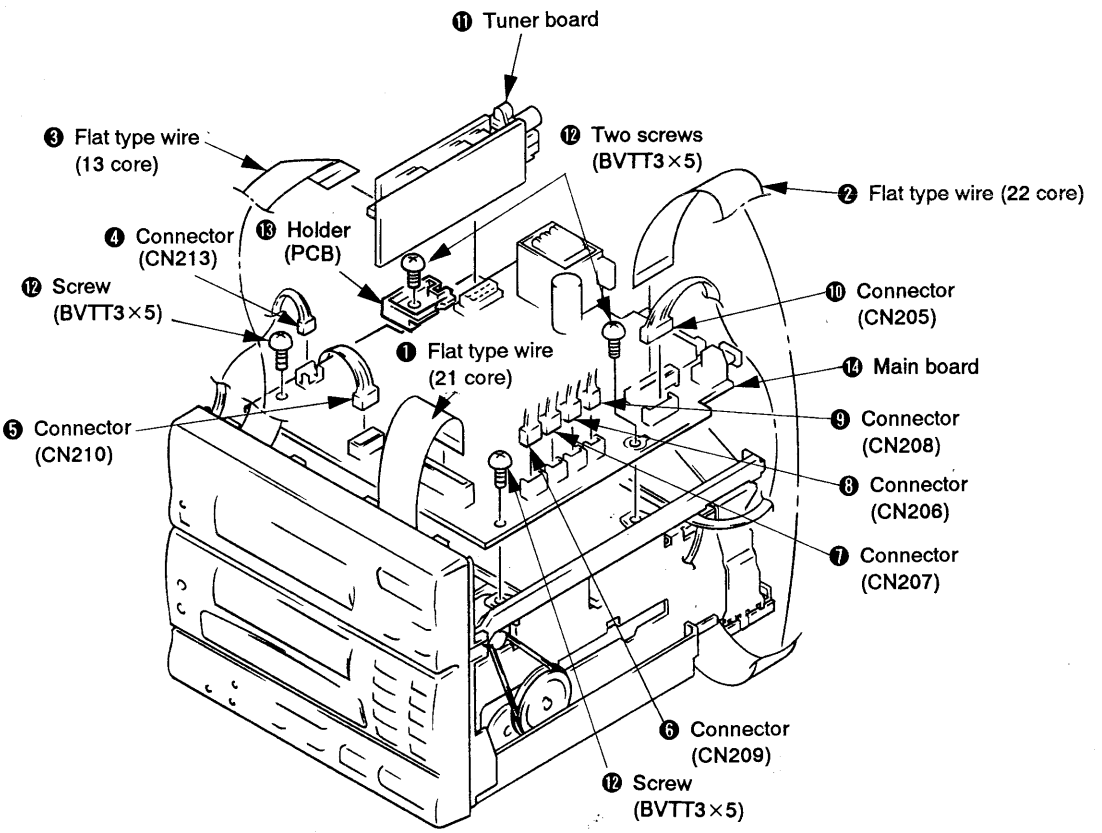

3-4. REMOVAL OF FRONT PANEL ASSY

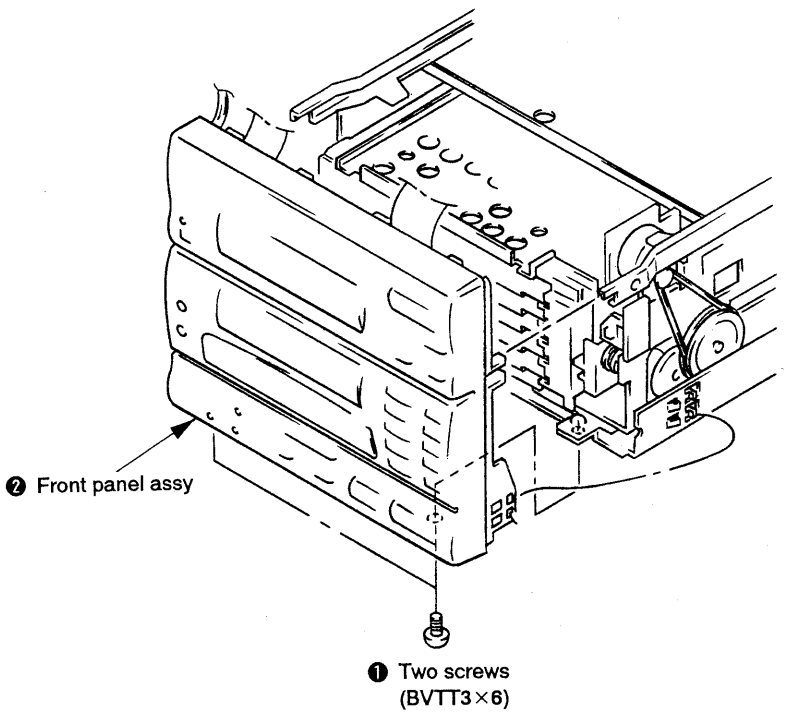

3-5. REMOVAL OF CD MECHANISM DECK

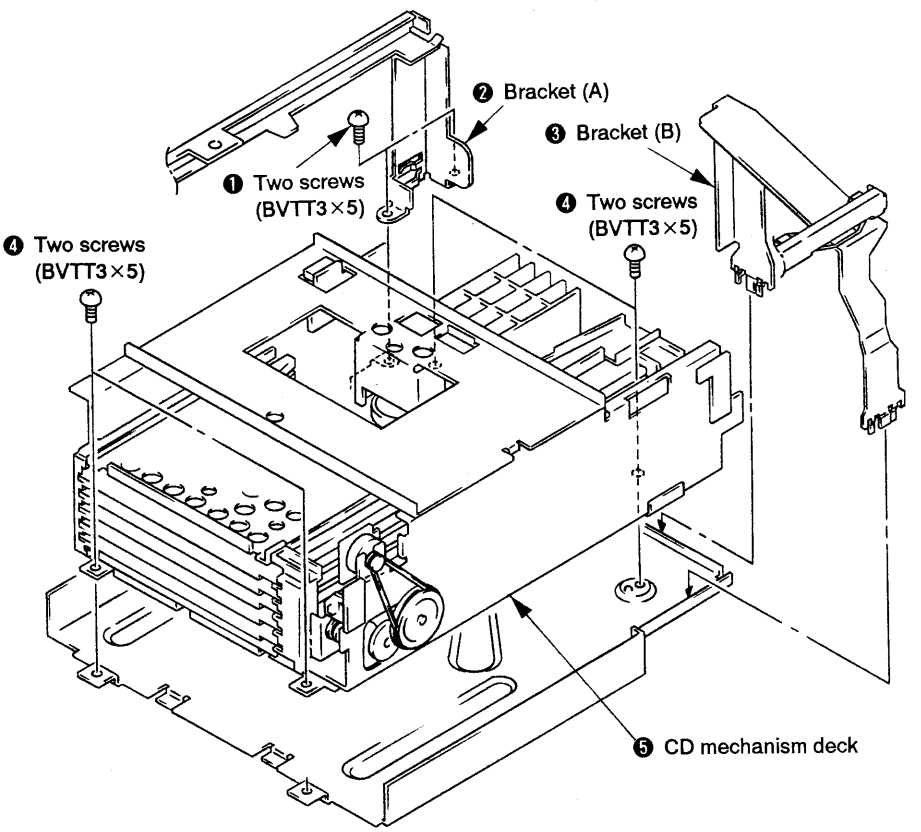

SECTION 4
ELECTRICAL ADJUSTMENTS

4-1. Tuner Section Adjustments

FM SECTION

Note : The FM front-end is carefully adjusted at the factory and is supplied as one whole block for replacement.

Setting :

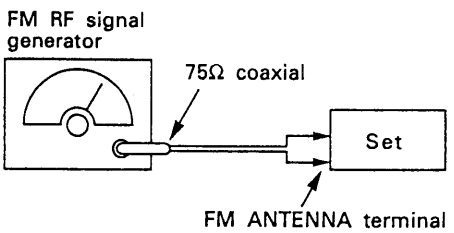

Carrier frequency : 98MHz
Modulation : 1kHz, 75kHz deviation
Output level : 1mV (60dBμ)

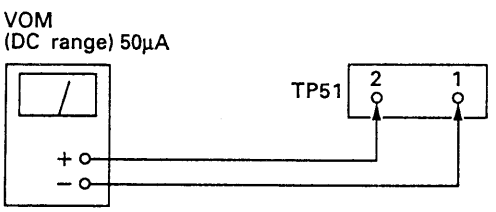

FM Discriminator Alignment (NULL Check)

BAND switch: FM

Procedure:

1. Supply a 1mV (60dBμ) 98MHz signal from the ANTENNA terminal.
2. Tune the set to 98MHz.
3. Adjust IFT51 for 0Vdc reading on the VOM.

Note : FM tuned indication lighting level adjustment should be made after FM discriminator alignment.

FM Tuned Indication Lighting Level Adjustment

BAND switch: FM

Procedure:

1. Supply a 17.8μV (25dBμ) (Except C70: G, IT model) or 12.5μV (22dBμ) (C70: G, IT models) 98MHz signal from the ANTENNA terminal.
2. Tune the set to 98MHz.
3. Adjust RV52 so that the TUNED light up.
4. Confirm that the TUNED light off with FM RF SSG output level set at –3dB.

MW SECTION

Setting :

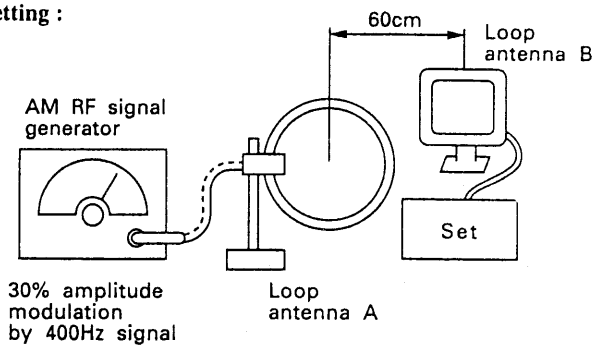

MW Tuned Indication Lighting Level Adjustment

BAND switch: MW

Procedure:

1. Set loop antenna A so that the loop antenna B input level becomes 1mV (55dBμ).
2. Tune the set to 1,404kHz (9k step mode) (10k step mode : 1,490kHz).
3. Adjust the RV51 so that the TUNED light up.
4. Confirm that the TUNED light off with AM RF SG output level set at –3dB.

SW SECTION C70 : E, EA, AUS, SP, JE model

Setting :

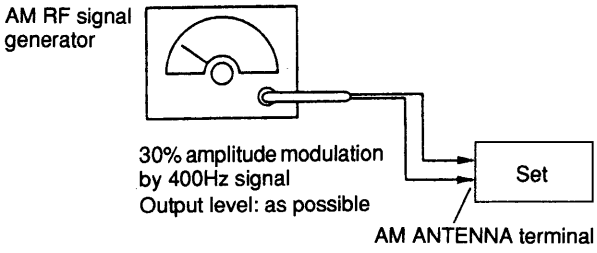

Note :

CND : Canadian model
G : German model
IT : Italian model
EA : Saudi Arabia model
AUS : Australian model
SP : Singapore model
JE : Tourist model

SW Tracking Adjustment

BAND switch: SW

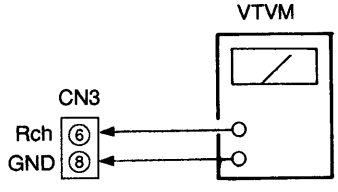

Adjust for maximum reading on VTVM.	
17MHz	CV1
7MHz	T1

Adjustment Location : TCB board.

SW OSC Voltage Adjustment

BAND switch: SW

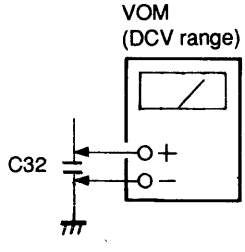

Procedure:

1. Press TUNING (+, –) button for 5.95MHz.
   Adjust T2 for 0.9–1.1V VOM reading.
2. Press the button for 17.9MHz.
   Adjust CV2 for 8.3–8.7V reading.

Adjustment Location : TCB011 board.

[TCB011 BOARD] — Component side —

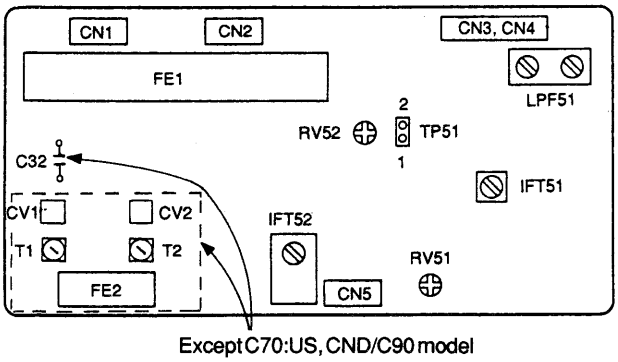

Except C70:US, CND/C90 model

4-2. CD Section Adjustments

CD SECTION

Note :

1. CD Block basically constructed to operate without adjustment. Therefore, check each item in order given.
2. Use YEDS-18 disc (3-702-101-01) unless otherwise indicated.
3. Use the oscilloscope with more than 10MΩ impedance.
4. Clean an object lens by an applicator with neutral detergent when the signal level is low than specified value with the following checks.

S Curve Check

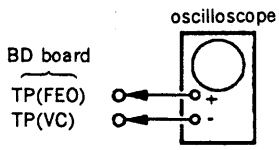

Procedure :

1. Connect oscilloscope to test point TP (FEO) on BD board.
2. Connect between test point TP (FES) and TP (VC) by lead wire.
3. Turn Power switch on. 'h.
4. Playback the disc (YEDS-18) and actuate the focus serch. (actuate the focus serch when disc table is moving in and out.)
5. Check the oscilloscope waveform (S curve) is symmetrical between A and B. And confirm peak to peak level within 3±1Vp-p.

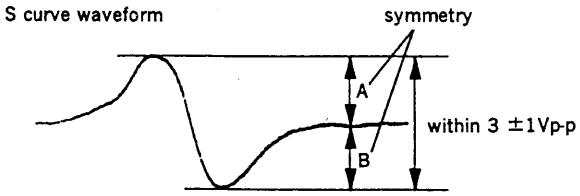

6. After check, remove the lead wire connected in step 2.

Note : • Try to mesure several times to make sure that the ratio of A : B or B : A is more than 10 : 7.
• Take sweep time as long as possible and light up the brightness to obtain best waveform.

RF Level Check

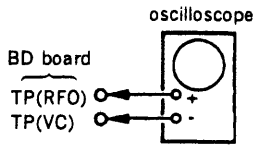

Procedure :

1. Connect oscilloscope to test point TP (RFO) on BD board.
2. Turn Power switch on.
3. Put disc (YEDS-18) in and playback.
4. Confirm that oscilloscope waveform is clear and check RF signal level is correct or not.

Note :

Clear RF signal waveform means that the shape "◇" can be clearly distinguished at the center of the waveform.

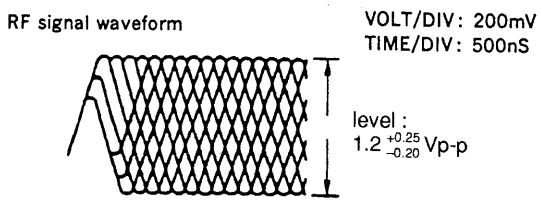

E-F Balance Check

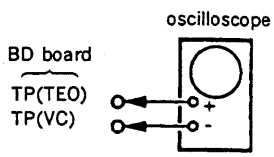

Procedure :

1. Connect test point TP (ADJ) on CD MAIN board to ground and TP (TES) to TP (VC) with lead wire.
2. Connect oscilloscope to test point TP (TEO) on BD board.
3. Turn Power switch on.
4. Put disc (YEDS-18) in and playback.
5. Confirm that the osilloscope waveform is symmetrical on the top and bottom in relation to 0Vdc, and check this level.

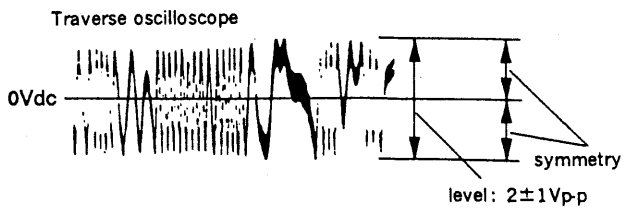

6. Remove the lead wire connected in step 1.

RF PLL Free-run Frequency Check

Procedure :

1. Connect frequency counter to test point (PLCK : IC202 ㊶ PIN with lead wire.

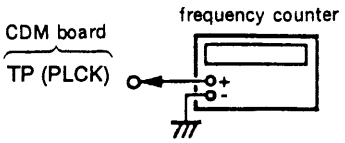

2. Turn Power switch on.
3. Confirm that reading on frequency counter is 4.3218MHz.

Focus/Tracking Gain

This gain has a margin, so even if it is slightly off.
There is no problem.
Therefore, do not perform, this adjustment.
Please note that it should be fixed to mechanical center position when you moved and do not know original position.

Adjustment Location:

[BD BOARD] — CONDUCTOR SIDE —

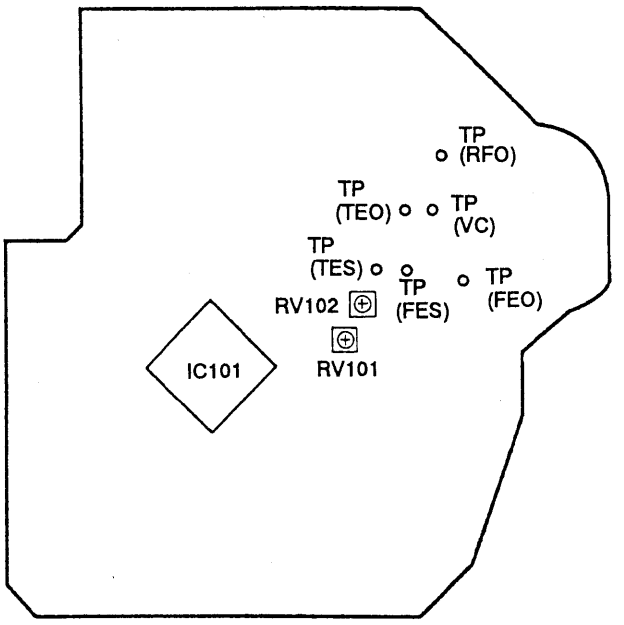

[CD MAIN BOARD] — CONDUCTOR SIDE —

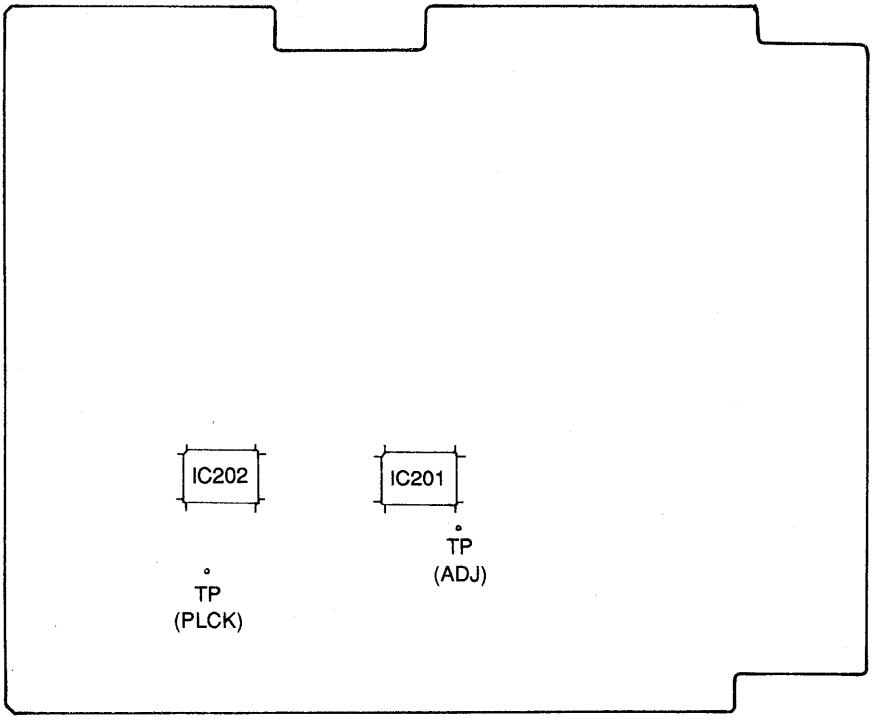

SECTION 5
IC PIN FUNCTIONS

• IC701 TUNER/TIMER CONTROLLER (TMP87CC70F-6129)

The terminals work to control tuner section (IC21, 51), FL tube display and reading and writing of IC702 (preset data), etc. according to key input and signal from the remote controller.

Pin No.	Pin Name	I/O	Active	Function
1	HOLD	I	↓	HOLD detecting interrupt terminal
2	HOLD RESET	I	↑	HOLD resetting interrupt terminal
3				GND
4	IF NGOUT	O	H	IF count NG output (Not in use)
5	LED (TUNING)	O	H	TUNING LED ON
6	LED (PRESET)	O	H	PRESET LED ON
7	AUB IN	I	L	AUDIO BUS input
8	AUB OUT	O	L	AUDIO BUS output
9	TEST			GND
10	XT IN	I		Low frequency oscillator connection terminal (32kHz)
11	XT OUT	O		Low frequency oscillator connection terminal (32kHz)
12	RESET	I	L	Reset signal input
13	X IN	I		High frequency oscillator connection terminal (8MHz)
14	X OUT	O		High frequency oscillator connection terminal (8MHz)
15	VSS			GND
16				GND
17, 18				Not in use
19	SCK	O		PLL serial clock output
20	SI	I		PLL serial data input
21	SO	O		PLL serial data output
22				Not in use
23	CE	O	H	PLL chip enable
24				Not in use
25	FM/AM	O	L	TUNER (FM/AM) sound selection terminal
26	SUB SEL	O	L	Sub sound selection terminal (Not in use)
27	DUAL IND	I	L	Sound dual signal detection terminal (Not in use)
28	MONO			Not in use
29	MUTE OUT	O	L	MUTING output
30	SIGNAL IN	I	L	TUNED input
31	STEREO IN	I	L	STEREO input
32	SIRCS IN	I	L	SIRCS input
33	VDD			+5V
34 – 40		O		Not in use
41 – 49	G8 – G0	O	H	FL tube digit output
50 – 59	S0 – S9	O	H	FL tube segment output
60 – 65		O		Not in use
66	VKK			FL tube driving power supply
67 – 71	KI0 – KI4	I	H	Key input
72				Not in use
73, 74				Not in use
75 – 78	KO3 – KO0	O	H	Key output
79	SDA	I/O		Data input/output for EEPROM
80	SCL	O		Clock output for EEPROM

• IC601 CD MASTER CONTROLLER (75518GF-127-3B9)

This controller exchanges data with IC602 (CD FL driver) on the PANEL board and IC201 (CD mechanism controller) on the MAIN board. It has mainly feature related functions.

Pin No.	Pin Name	I/O	Function
1	KEY0	I	Key input port (A/D input)
2	AVREF	–	Reference voltage input pin of A/D converter (Connected to +5V)
3	VDD	–	+5V power supply
4	VDD	–	
5		O	Not used (Open)
6	DRIVER RESET	O	Reset signal output for CD FL driver (IC602)
7	ON/$\overline{\text{OFF}}$	O	+5V switch power supply (signal system) control "L"=OFF. "L" when ST function is on. "H" at other times.
8	Mecha-con RESET	O	Reset signal output for CD mechanism controller (IC201)
9		O	Not used (Open)
10	$\overline{\text{CS}}$	O	Latched output to CD FL driver (IC602)
11	AU BUS OUT	O	AU Bus output port
12	MREQ	O	Output of communication data read request to CD mechanism controller (IC201) (master request)
13	AU BUS/$\overline{\text{SIRCS}}$	I	AU Bus/SIRCS selection. AU Bus=Fixed at "H"
14	TEST	I	Test mode pin. TEST=Fixed at "H".
15	SUF. REP	I	Normally, SUF.REP=Fixed at "H". By setting this pin to "L", SHUFFLE, ALL-DISC, REP are possible.
16	D. SKIP	I	Sound field/$\overline{\text{EDIT}}$ (S332) function selection. Fixed at "H". "H": Sound field file. "L": Edit
17		I	Not used (Connected to +5V)
18		I	
19		I	
20		I	
21		I	
22		I	
23		I	
24	SACK	I	Input of communication ANSWER CODE from CD mechanism controller (IC201)
25		O	Not used (Open)
26		O	
27		O	
28		O	
29	P53	O	Disc indicator (LED) orange (DISC 4)
30	P52	O	Disc indicator (LED) orange (DISC 3)
31	P51	O	Disc indicator (LED) orange (DISC 2)
32	P50	O	Disc indicator (LED) orange (DISC 1)
33	Vss	–	GND
34	P43	O	Disc indicator (LED) green (DISC 4)
35	P42	O	Disc indicator (LED) green (DISC 3)
36	P41	O	Disc indicator (LED) green (DISC 2)
37	P40	O	Disc indicator (LED) green (DISC 1)
38	P33	O	Disc indicator (LED) orange (DISC 5)
39	P32	O	Disc indicator (LED) green (DISC 5)
40	A SELECT	O	Output of A SELECT signal to INPUT SELECTOR (IC105)

Pin No.	Pin Name	I/O	Function
41	M/$\overline{F}$	I/O	Signal indicating type of communication with CD mechanism controller (IC201) "H": Mechanism command "L": File command
42		O	Not used (Open)
43		O	
44		O	
45		O	
46		I	Not used (Connected to GND)
47		I	
48	OINT	I	Communication data read request (interruption request) signal from CD mechanism controller (IC201)
49	AU BUS IN	I	AU Bus input port (Interruption pin)
50		I	Not used (Connected to +5V)
51	DPDAT	O	Output of data to CD FL driver (IC602)
52	DPCK	O	Output of clock to CD FL driver (IC602)
53		I	Not used (Connected to GND)
54	Vss	–	GND
55	XT1		Not used (Connected to GND)
56	XT2		Not used (Open)
57	IC		Not used (Connected to GND)
58	X1	I	Pin connected for system clock (4.19 MHz) oscillator
59	X2	O	
60	$\overline{RESET}$	I	System reset input. "L": Reset
61		O	Not used (Open)
62		O	
63		O	
64		O	
65	P133	O	
66	P132	O	
67	P131	O	
68	P130	O	
69	CMD3	I/O	Command data line with CD mechanism controller (IC201)
70	CMD2	I/O	
71	CMD1	I/O	
72	CMD0	I/O	
73	AVss	–	GND
74		I	Not used (Connected to GND)
75		I	
76		I	
77		I	
78	KEY3	I	Key input port (A/D input)
79	KEY2	I	
80	KEY1	I	

- **IC201 CD MECHANISM CONTROLLER (μPD75516GF-431-3B9)**

This controller exchanges data with CXA1372AQ (RF signal processor, servo processor), CXD2500BQ (digital signal processor), MSM6538 (digital filter), 75518GF (CD master controller) of the CD section. It mainly controls the mechanism section.

Pin No.	Pin Name	I/O	Function
1			Open
2	AVDD		+5V power supply
3	VDD		
4	VDD		
5	ENCODER E3	I	Stocker position detection decoder input 3 *1
6	ENCODER E2	I	Stocker position detection decoder input 2 *1
7	ENCODER E1	I	Stocker position detection decoder input 1 *1
8	ENCODER E0	I	Stocker position detection decoder input 0 *1
9	D7	I/O	Input/output of data written in and read from SRAM (LH5160TA)
10	D6	I/O	
11	D5	I/O	
12	D4	I/O	
13	D3	I/O	
14	D2	I/O	
15	D1	I/O	
16	D0	I/O	
17	GFS	I	Input of GFS signal from digital signal processor (CXD2500BQ) L: NG. H: OK
18	SENSE	I	Input of SENS signal from digital signal processor (CXD2500BQ)
19	DOWN SW	I	Input of down of up/down switch
20	UP SW	I	Input of up of up/down switch
21	A11	O	Output of address to SRAM (LH5160TA)
22	A10	O	
23	A9	O	
24	A8	O	
25		I	Not used
26	LD ON	O	Optical pickup block laser diode control output H: ON. L: OFF
27	WE	O	Output of write enable to SRAM
28	A12	O	Output of address to SRAM (LH5160TA)
29	A7	O	
30	A6	O	
31	A5	O	
32	A4	O	
33	GND		GND
34	A3	O	Output of address to SRAM (LH5160TA)
35	A2	O	
36	A1	O	
37	A0	O	
38	QINT	O	Output of communication data read request to CD master controller (75518GF)
39	M/F	I	Signal indicating type of communication data from CD master controller (75518GF) H: Mechanism command. L: File command
40	SACK	O	Output of communication answer code to CD master controller (75518GF)

Pin No.	Pin Name	I/O	Function
41	MREQ	I	Input of communication data read request from CD master controller (75518GF) (master request)
42	CMD3	I/O	Input/output of data 3 of communication with CD master controller (75518GF)
43	CMD2	I/O	Input/output of data 2 of communication with CD master controller (75518GF)
44	CMD1	I/O	Input/output of data 1 of communication with CD master controller (75518GF)
45	CMD0	I/O	Input/output of data 0 of communication with CD master controller (75518GF)
46	CHIN	I	Input of track jump count from RF/servo IC (CXA1372AQ)
47	FOK	I	Input of focus OK signal from RF/servo IC (CXA1372AQ). H: OK
48	SCOR	I	Input of sub code sync S0+S1 detection from digital signal processor (CXD2500BQ)
49	STOCK IN	I	Input of tray position (STOCK IN) detection *2
50	SUBQ	I	Input of sub code Q data from digital signal processor (CXD2500BQ)
51	GND		GND
52	SQCK	O	Output of sub code Q data read clock to digital signal processor (CXD2500BQ)
53	ADJ	I	Test mode input. Fixed at level H (Test mode is set when set to level L)
54	GND		GND
55	XT1	I	Not used (Connected to GND)
56	XT2	O	Not used (Open)
57	GND		GND
58	X1	I	Pin connected for system clock (4.19 MHz) oscillator
59	X2	O	
60	RESET	I	Input of reset from CD master controller (75518GF). L: Reset
61	D/F LATCH	O	Output of serial data latch signal to digital filter (MSM6538)
62	DSP LATCH	O	Output of serial data latch signal to digital signal processor (CXD2500BQ)
63	CLK	O	Output of serial clock to digital signal processor (CXD2500BQ) and digital filter (MSM6538)
64	DATA	O	Output of serial data to digital signal processor (CXD2500BQ) and digital filter (MSM6538)
65	DFCTSW	O	RF/servo IC (CXA1372AQ) DEFECT circuit ON/OFF control output. L: ON. H: OFF Stops disc scratch detection during focus search (Set to H)
66	MUTE	O	CD audio output mute signal. H: Mute
67	CLAMP M3M	O	Clamp motor control signal *3
68	CLAMP M3P	O	
69	UP/DOWN M2M	O	Stocker motor control signal *4
70	UP/DOWN M2P	O	
71	LOADING M1M	O	Loading motor control signal *5
72	LOADING M1P	O	
73	A GND		GND
74	STOK OK	I	Tray position detection input. L: Stocker UP/DOWN possible position *2
75	DISC SENS	I	Disc sensor input. H: Disc present. L: No disc
76	DISC TABLE IN SW	I	Loading-in switch input
77	DISC TABLE OUT SW	I	Loading-out switch input
78	TEST	I	Test mode input. Fixed at level H. (Test mode is set when set to level L)
79	AF ADJ	I	Test mode input. Fixed at level H. (Test mode is set when set to level L)
80			Not used (Open)

*1

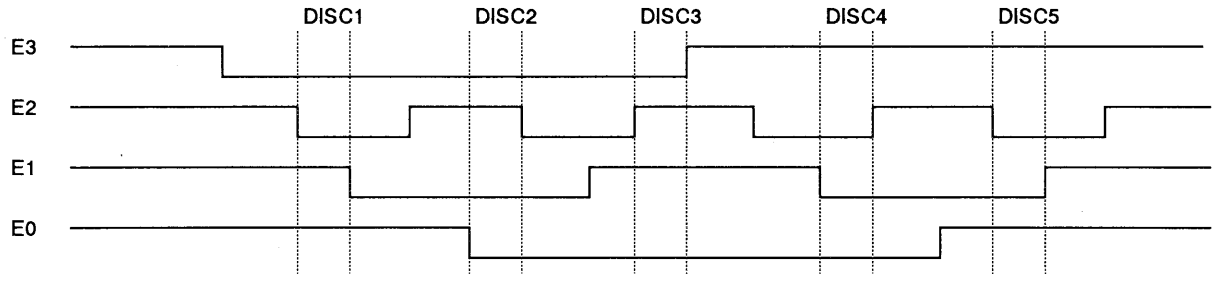

*2

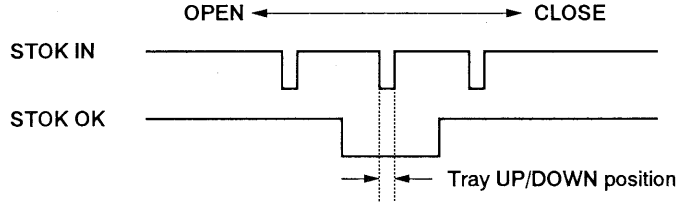

*3

	UP	DOWN	BRAKE
CLAMP M3P	H	L	H
CLAMP M3M	L	H	H

*4

	UP	DOWN	BRAKE
UP/DOWN M2P	H	L	H
UP/DOWN M2M	L	H	H

*5

	OUT	IN	BRAKE
LOADING M1P	H	L	H
LOADING M1M	L	H	H

SECTION 6
DIAGRAMS

6-1. CIRCUIT BOARDS LOCATION

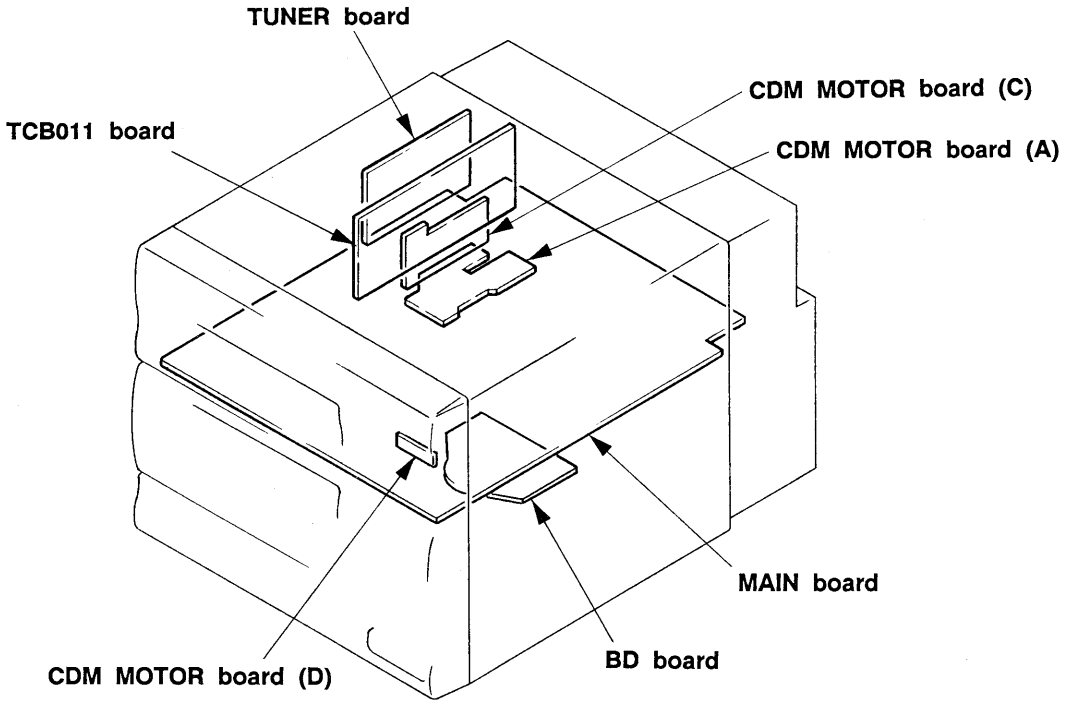

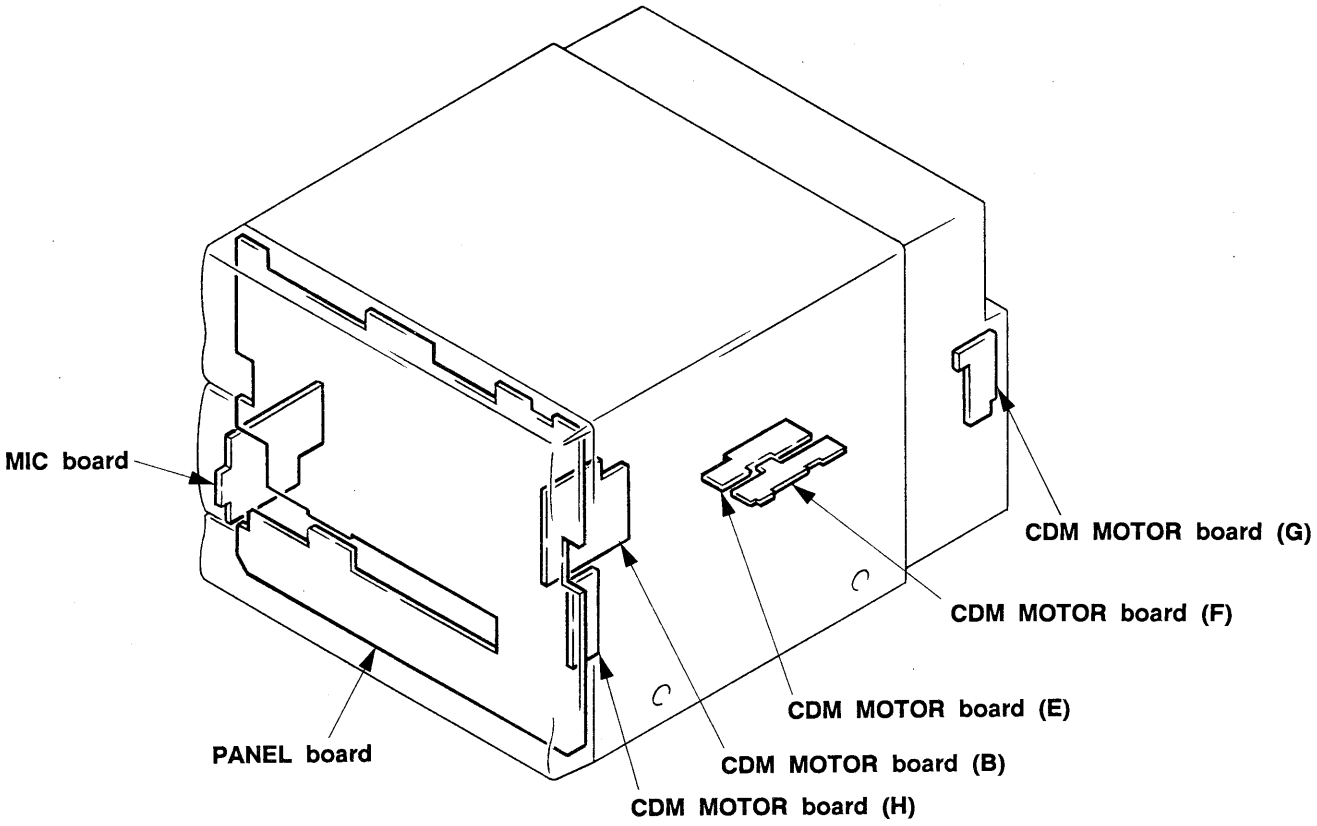

6-2. BLOCK DIAGRAM —TUNER SECTION —

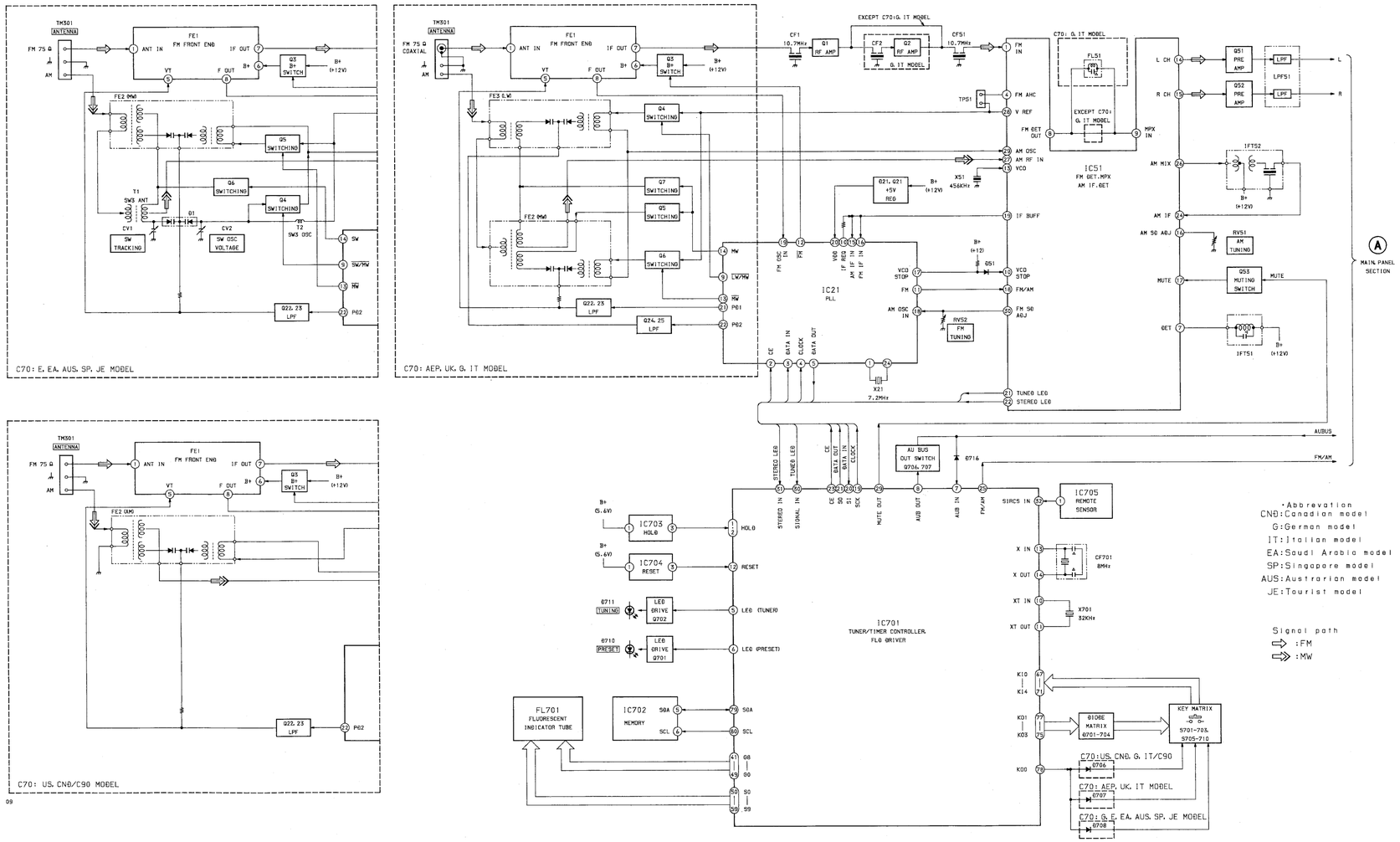

6-3. BLOCK DIAGRAM —DISPLAY SECTION —

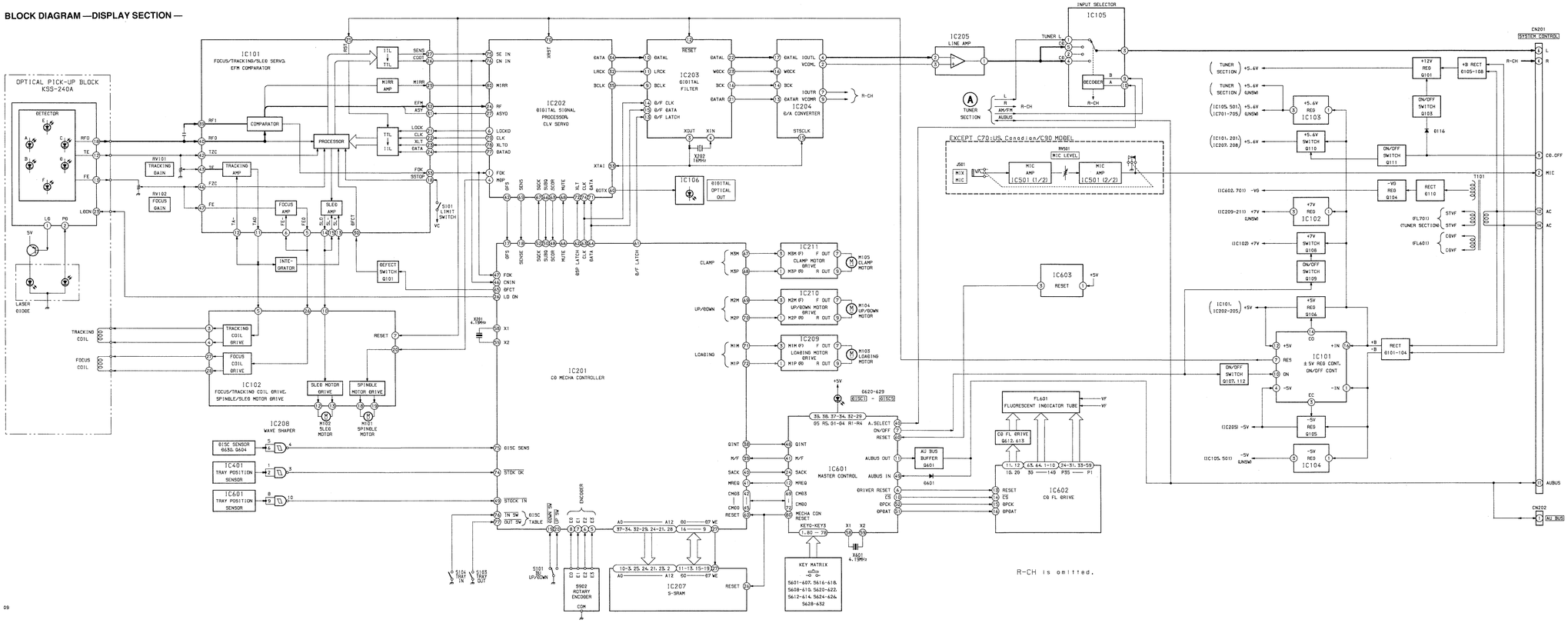

• IC BLOCK DIAGRAMS

IC21 LC7218M

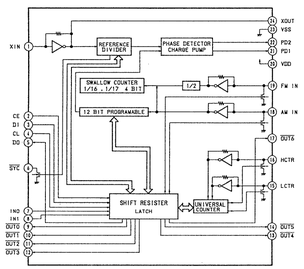

IC51 LA1851NM

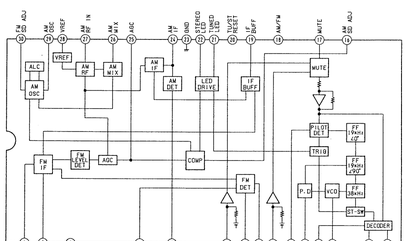

Note:

- All capacitors are in μF unless otherwise noted. pF:μμF 50WV or less are not indicated except for electrolytics and tantalums.
- All resistors are in Ω and 1/4W or less unless otherwise specified.
- △ : internal component.
- ▬▬ : B+ Line
- ▭▭ : B− Line
- ▭ : adjustment for repair.
- Voltage and waveforms are dc with respect to ground under no-signal conditions.
  no mark : FM
- Voltages are taken with a VOM (Input impedance 10Ω).
  Voltage variations may be noted due to normal production tolerances.
- Signal path.
  ⇨ : FM

6-4. SCHEMATIC DIAGRAM
• TUNER SECTION

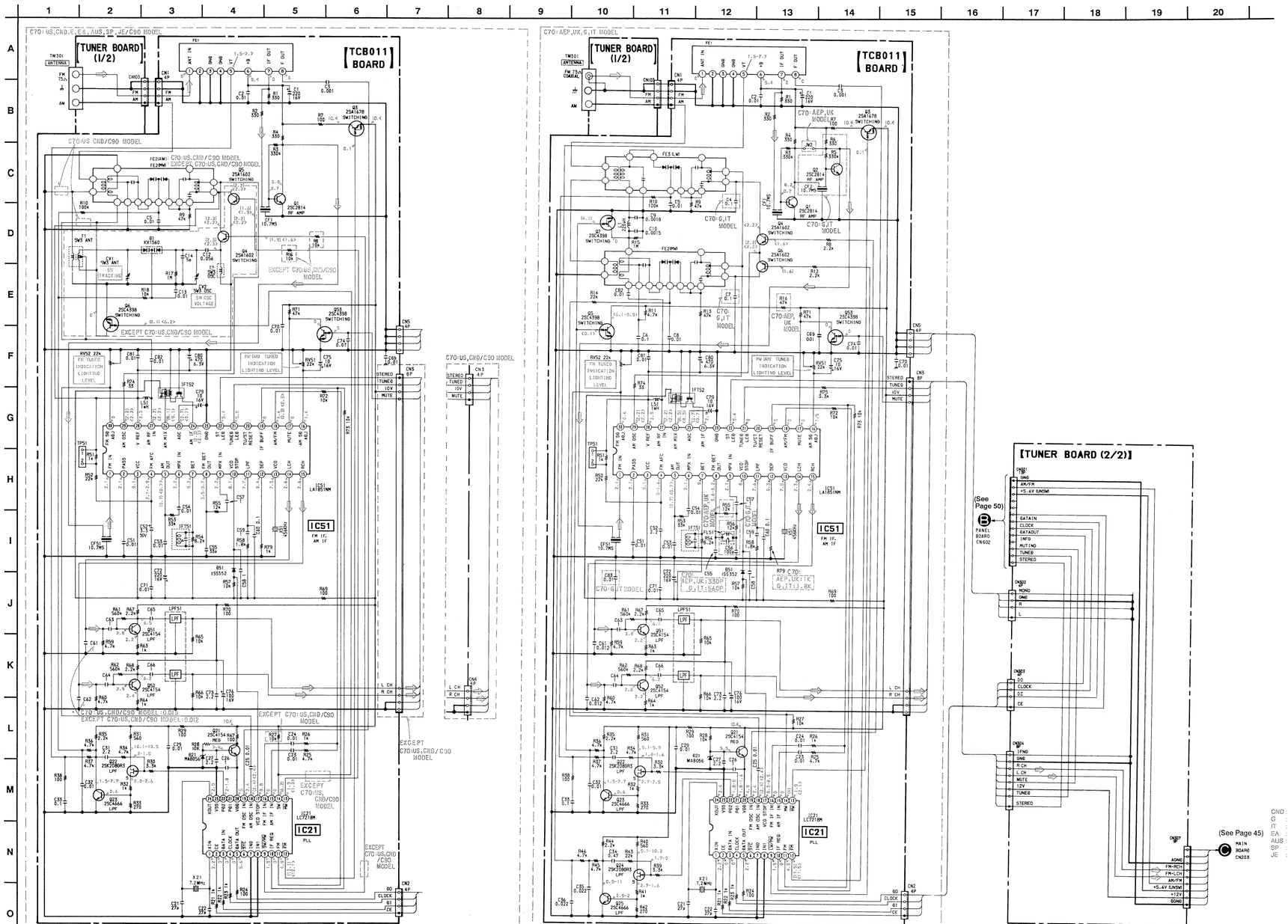

CND : Canadian model
G : German model
IT : Italian model
EA : Saudi Arabia model
AUS : Australian model
SP : Singapore model
JE : Tourist model

6-5. PRINTED WIRING BOARD

- **TUNER SECTION**
- **See page 23 for Circuit Boards Location and see page 53, 54 for Semiconductor Lead Layouts.**

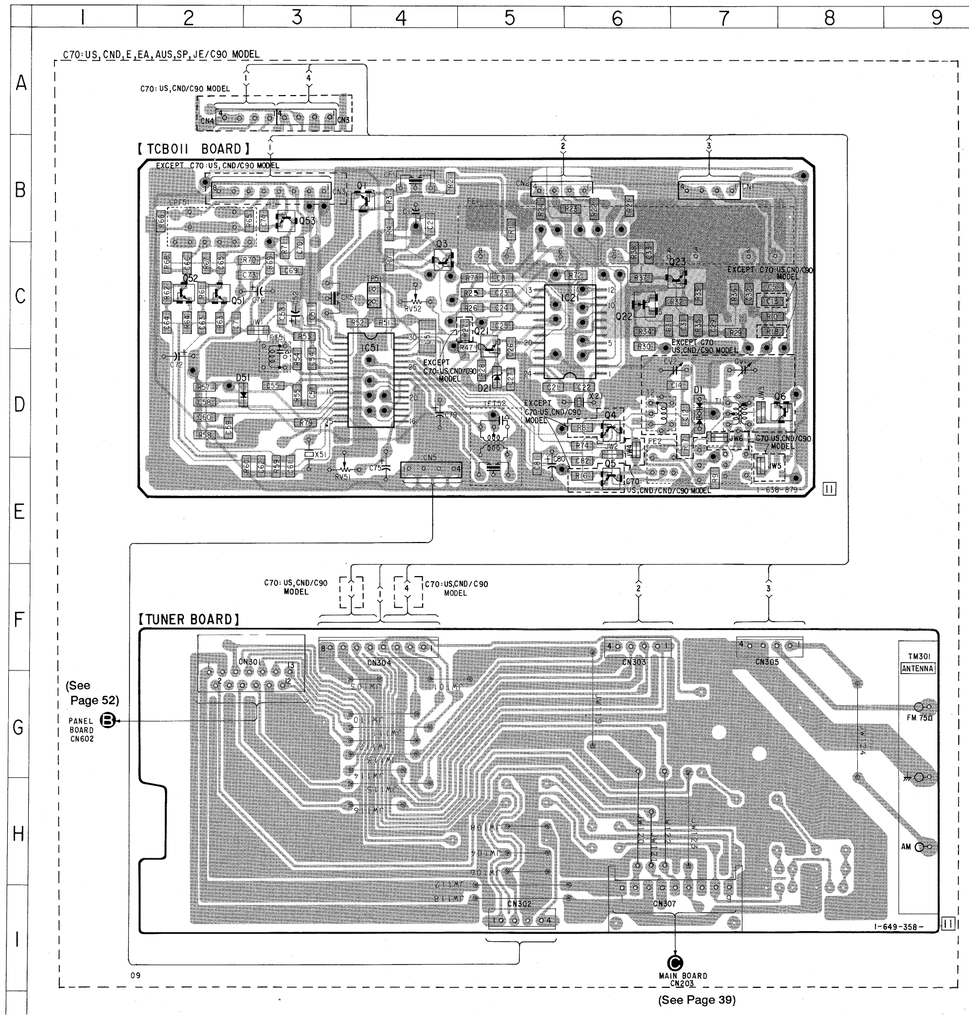

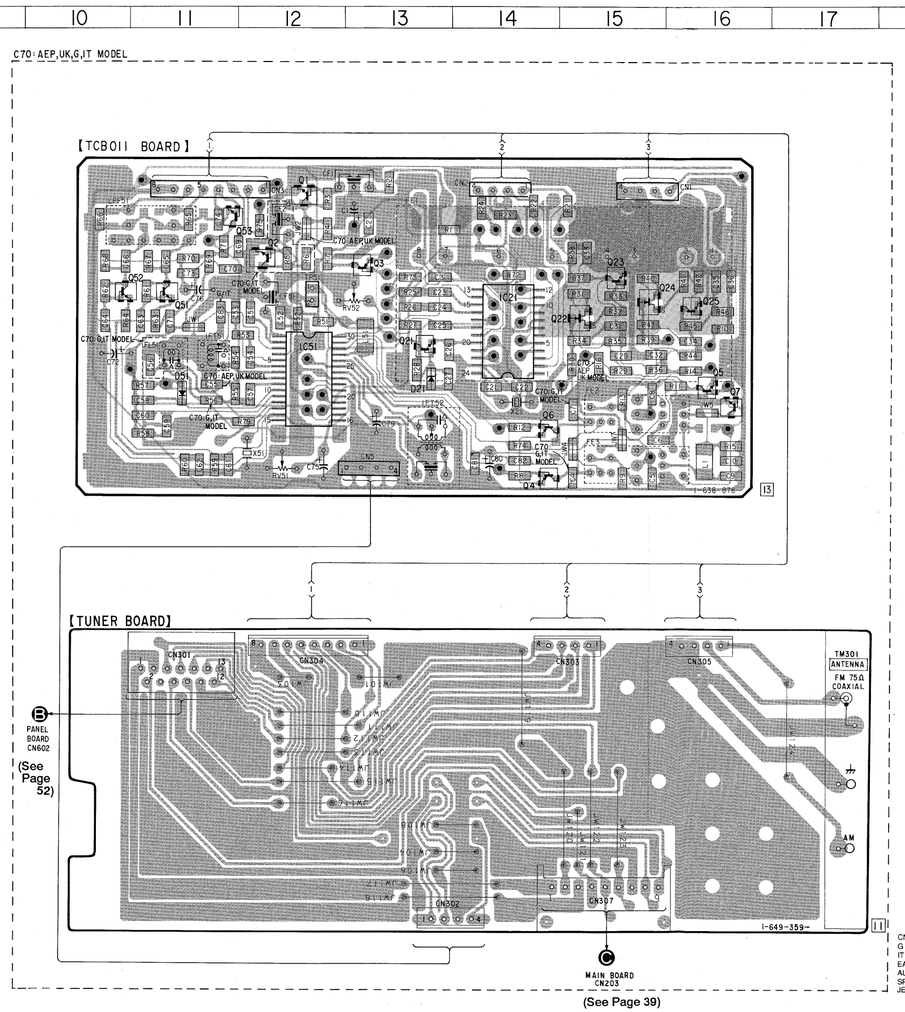

- **Semiconductor Location**
- **C70:US,CND,E,EA, AUS,SP,JE/C90 MODEL**

Ref. No.	Location
D1	D-7
D21	D-5
D51	D-2
IC21	C-6
IC51	C-4
Q1	B-4
Q3	C-4
Q4	D-6
Q5	E-6
Q6	D-8
Q21	C-5
Q22	C-6
Q23	C-7
Q51	C-2
Q52	C-2
Q53	B-3

- **Semiconductor Location**
- **C70:AEP, UK, G, IT MODEL**

Ref. No.	Location
D21	D-13
D51	D-11
IC21	C-14
IC51	C-12
Q1	B-12
Q2	C-12
Q3	C-13
Q4	E-14
Q5	D-16
Q6	D-14
Q7	D-16
Q21	C-13
Q22	C-15
Q23	C-15
Q24	C-15
Q25	C-16
Q51	C-11
Q52	C-10
Q53	B-11

Notes on printed wiring baords:

- ○—— : parts extracted from the components side.
- △ : internal component.
- ▭ : panel designation.
- ● : Through hole.
- ⁘ : Pattern on the side which is seen.
- ⁘ : Pattern of the rear side.

CND : Canadian model
G : German model
IT : Italian model
EA : Saudi Arabia model
AUS : Australian model
SP : Singapore model
JE : Tourist model

6-6. PRINTED WIRING BOARD

- MAIN SECTION
- See page 23 for Circuit Boards Location and see page 53, 54 for Semiconductor Lead Layouts.

• Semiconductor Location

Ref. No.	Location	Ref. No.	Location
D101	F-6	Q101	E-10
D102	F-6	Q101(BD)	C-1
D103	F-6	Q103	E-11
D104	F-6	Q104	C-9
D105	G-6	Q105	E-13
D106	G-6	Q106	C-12
D107	G-6	Q107	D-13
D108	G-6	Q108	E-9
D109	D-11	Q109	D-10
D110	C-8	Q110	C-10
D111	D-8	Q111	C-11
D112	C-8	Q112	D-10
D113	D-7		
D114	F-9		
D115	F-9		
D116	E-10		
D117	D-10		
D118	D-10		
D205	F-12		
D206	J-13		
D207	J-14		
IC101(BD)	B-2		
IC101	E-13		
IC102(BD)	B-3		
IC102	E-8		
IC103	C-9		
IC104	H-9		
IC105	H-6		
IC106	J-5		
IC201	H-13		
IC202	H-11		
IC203	H-9		
IC204	H-8		
IC205	I-7		
IC207	F-13		
IC208	E-14		
IC209	I-14		
IC210	I-13		
IC211	I-11		
IC401	G-21		
IC501	B-18		
IC601	G-19		

Note:

- ○—— : parts extracted from the components side.
- △ : internal component.
- ▭ : panel designation.
- ● : Through hole.
- ▒ : Pattern on the side which is seen.
- ▒ : Pattern on the rear side.

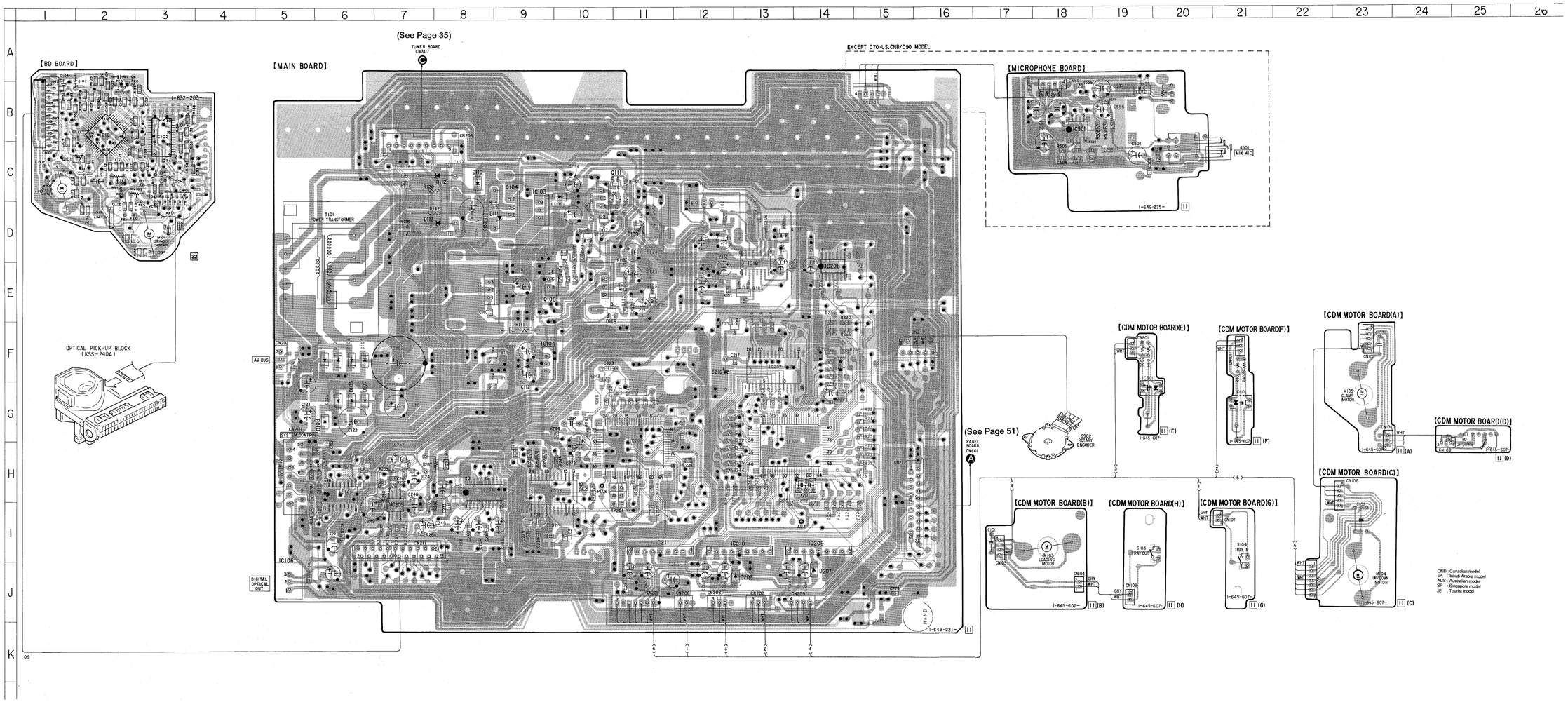

• IC BLOCK DIAGRAMS

IC101 (BD BOARD) CXA1372AQ

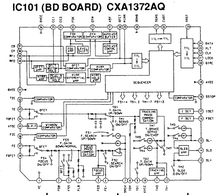

IC101 (MAIN BOARD) M5290FP

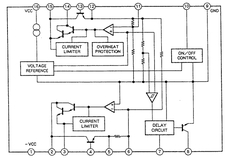

IC102 LA6532M

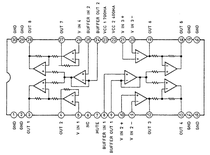

IC105 MC14052BF

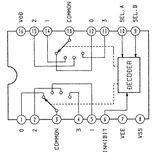

IC202 CXD2500BQ

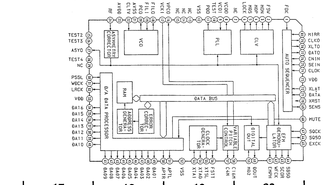

IC203 MSM6538

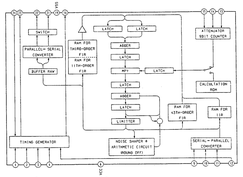

IC209, 210, 211 BA6418N

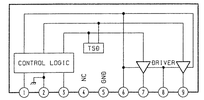

6-7. SCHEMATIC DIAGRAM
• MAIN SECTION

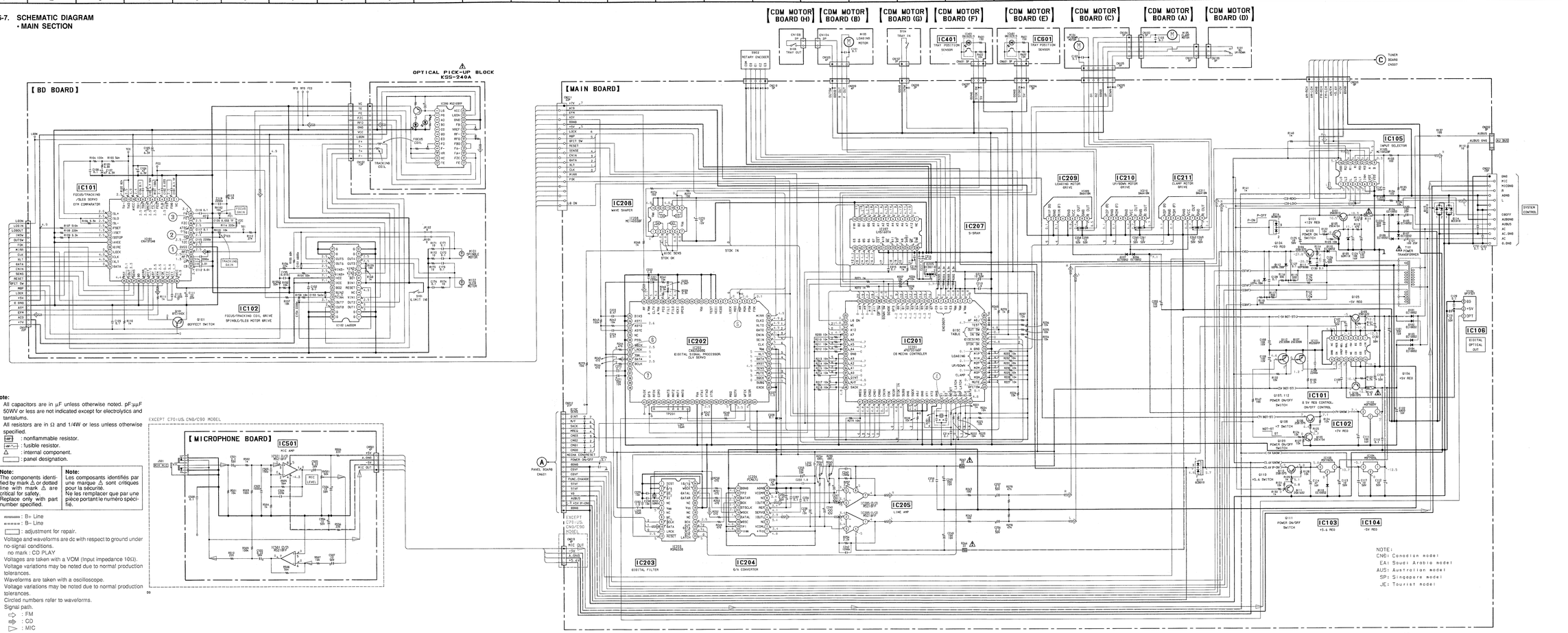

• Waveforms

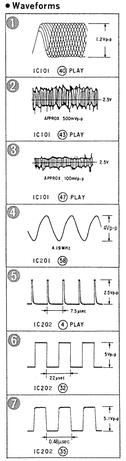

Note:
- All capacitors are in μF unless otherwise noted. pF:μμF 50WV or less are not indicated except for electrolytics and tantalums.
- All resistors are in Ω and 1/4W or less unless otherwise specified.
- : nonflammable resistor.
- : fusible resistor.
- ⚠ : internal component.
- : panel designation.

Note:
The components identified by mark ⚠ or dotted line with mark ⚠ are critical for safety.
Replace only with part number specified.

Note:
Les composants identifiés par une marque ⚠ sont critiques pour la sécurité.
Ne les remplacer que par une pièce portant le numéro spécifié.

- : B+ Line
- : B- Line
- : adjustment for repair.
- Voltage and waveforms are dc with respect to ground under no-signal conditions.
  no mark : CD PLAY
- Voltages are taken with a VOM (Input impedance 10MΩ). Voltage variations may be noted due to normal production tolerances.
- Waveforms are taken with a oscilloscope. Voltage variations may be noted due to normal production tolerances.
- Circled numbers refer to waveforms.
- Signal path.
  : FM
  : CD
  : MIC

6-8. SCHEMATIC DIAGRAM
• PANEL SECTION

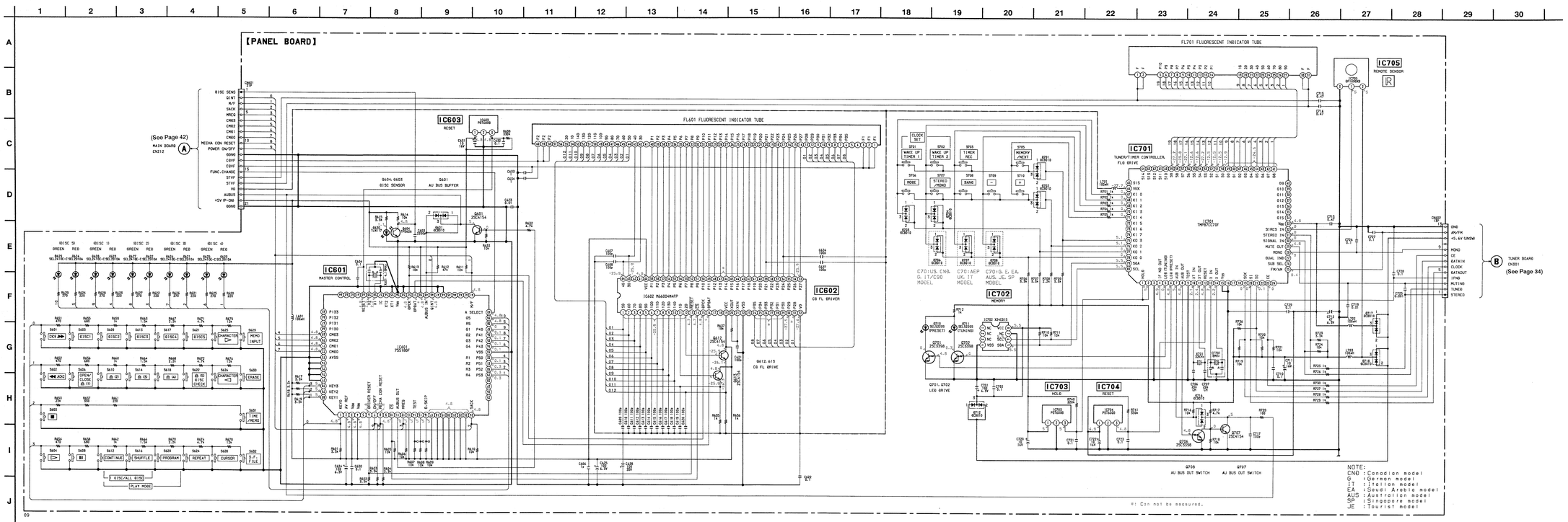

Note:

- All capacitors are in μF unless otherwise noted. pF:μμF 50WV or less are not indicated except for electrolytics and tantalums.
- All resistors are in Ω and 1/4W or less unless otherwise specified.
- △ : internal component.
- ▭ : panel designation.
- ▬▬▬ : B+ Line
- ▬▬▬ : B− Line
- Voltage and waveforms are dc with respect to ground under no-signal conditions.
  no mark : FM
- Voltages are taken with a VOM (input impedance 10MΩ). Voltage variations may be noted due to normal production tolerances.

6-9. PRINTED WIRING BOARD

- **PANEL SECTION**
- **See page 23 for Circuit Boards Location and see page 53, 54 for Semiconductor Lead Layouts.**

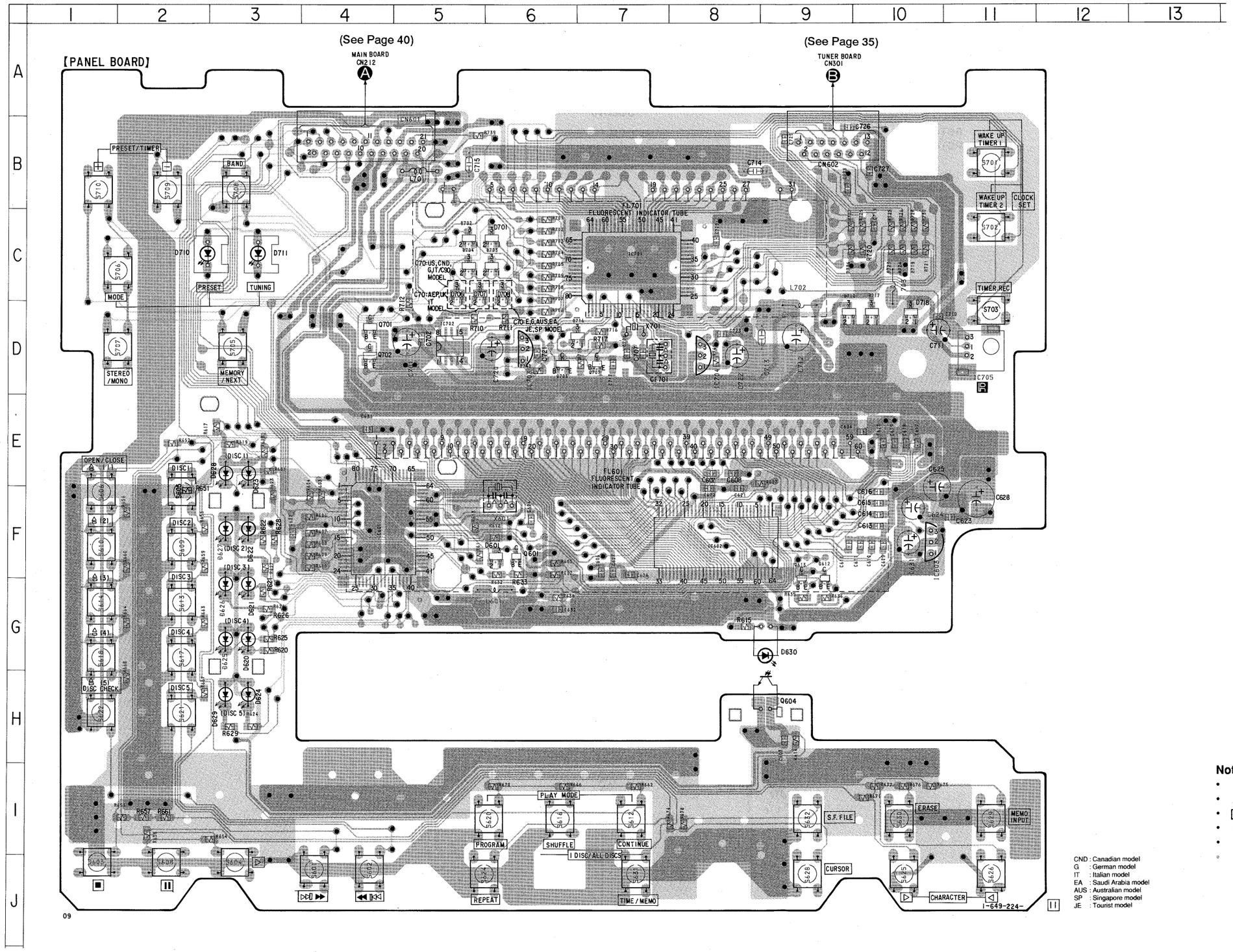

CND : Canadian model
G : German model
IT : Italian model
EA : Saudi Arabia model
AUS : Australian model
SP : Singapore model
JE : Tourist model

- **Semiconductor Location**

Ref. No.	Location
D601	F-6
D620	G-3
D621	G-3
D622	F-3
D623	E-3
D624	H-3
D625	G-3
D626	G-3
D627	F-3
D628	E-3
D629	H-3
D630	G-9
D701	C-6
D702	C-5
D703	C-6
D704	C-5
D706	C-5
D707	C-5
D708	C-6
D710	C-2
D711	C-3
D712	D-9
D716	D-7
D717	D-10
D718	D-10
IC601	F-4
IC602	F-8
IC603	F-10
IC701	C-7
IC702	D-5
IC703	D-6
IC704	D-8
IC705	D-11
Q601	F-6
Q604	H-9
Q612	F-9
Q613	F-9
Q701	D-4
Q702	D-4
Q706	D-6
Q707	D-7

Note:

- ○—— : parts extracted from the components side.
- △ : internal component.
- ▭ : panel designation
- ● : Through hole.
- ⁘ : Pattern on the side which is seen.
- ⁘ : Pattern of the rear side.

6-10. SEMICONDUCTOR LEAD LAYOUTS

BA6418N

CXA1372AQ

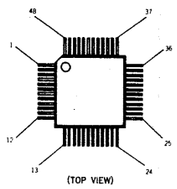

CXD2500BQ
TMP87CC70F-6129
μPD75516GF-461-3B9

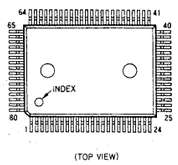

GP1F32T

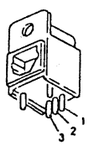

GP1U90XB

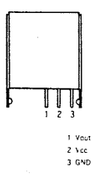

LA1851NM

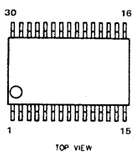

LA5601

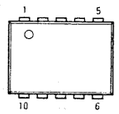

LA6532M

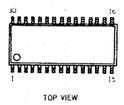

LC7218M

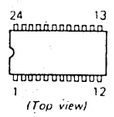

LH5160N-10L

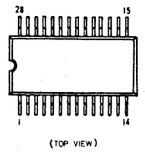

MC14052BF

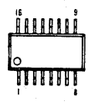

MC14093BF

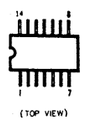

MSM6538-01GS-VKR1

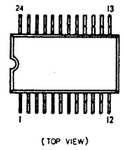

M5F78M07L
TA7805S

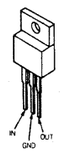

M5218FP
M5218AFP

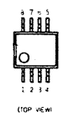

M5290FP

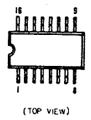

M66004M4FP

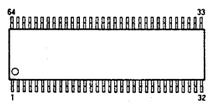

ON1023-S

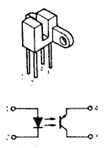

PCM-67U-B

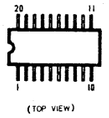

PST600D-T
PST600G-T

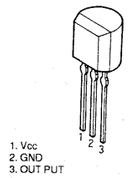

TA79005S

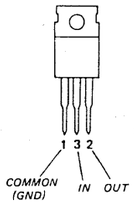

X24C01S

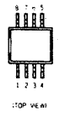

75518GF-127-3B9

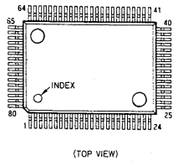

TPS626

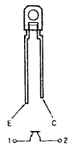

2SA1678
2SA1602-F
2SC2814-F4
2SC3398
2SC4154-F
2SC4398
2SC4666B
DTC144EK

2SB1094-LK
2SB1375-LC

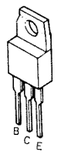

2SD1615A-GP

2SD2012

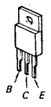

2SK208GR3

DCB010

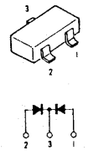

EC10DS2

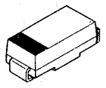

KV1560NT

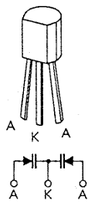

MA8056
1SS352

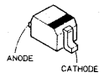

SEL2410E-C-TP6
SEL5220S-TH8C

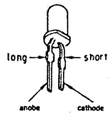

TLN117

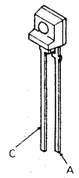

UZM11X

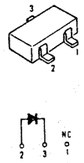

UZP-30BB
UZP-4.3BA
UZP-8.2BB

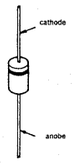

1SS226

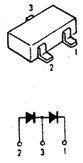

SECTION 7
EXPLODED VIEWS

NOTE:
- -XX, -X mean standardized parts, so they may have some difference from the original one.
- Color Indication of Appearance Parts Example:
  KNOB, BALANCE (WHITE) . . . (RED)
  ↑ Parts color ↑ Cabinet's color
- Hardware (# mark) list is given in the last of this parts list.
- Items marked " * " are not stocked since they are seldom required for routine service. Some delay should be anticipated when ordering these items.
- The mechanical parts with no reference number in the exploded views are not supplied.
- CND : Canadian model
- G : German model
- IT : Italian model
- JE : Tourist model
- EA : Saudi Arabia model
- AUS : Australian model
- SP : Singapore model

The components identified by mark ⚠ or dotted line with mark ⚠ are critical for safety.
Replace only with part number specified.

Les composants identifiés par une marque ⚠ sont critiques pour la sécurité. Ne les remplacer que par une piéce portant le numéro spécifié.

7-1. CASE, BOARD SECTION

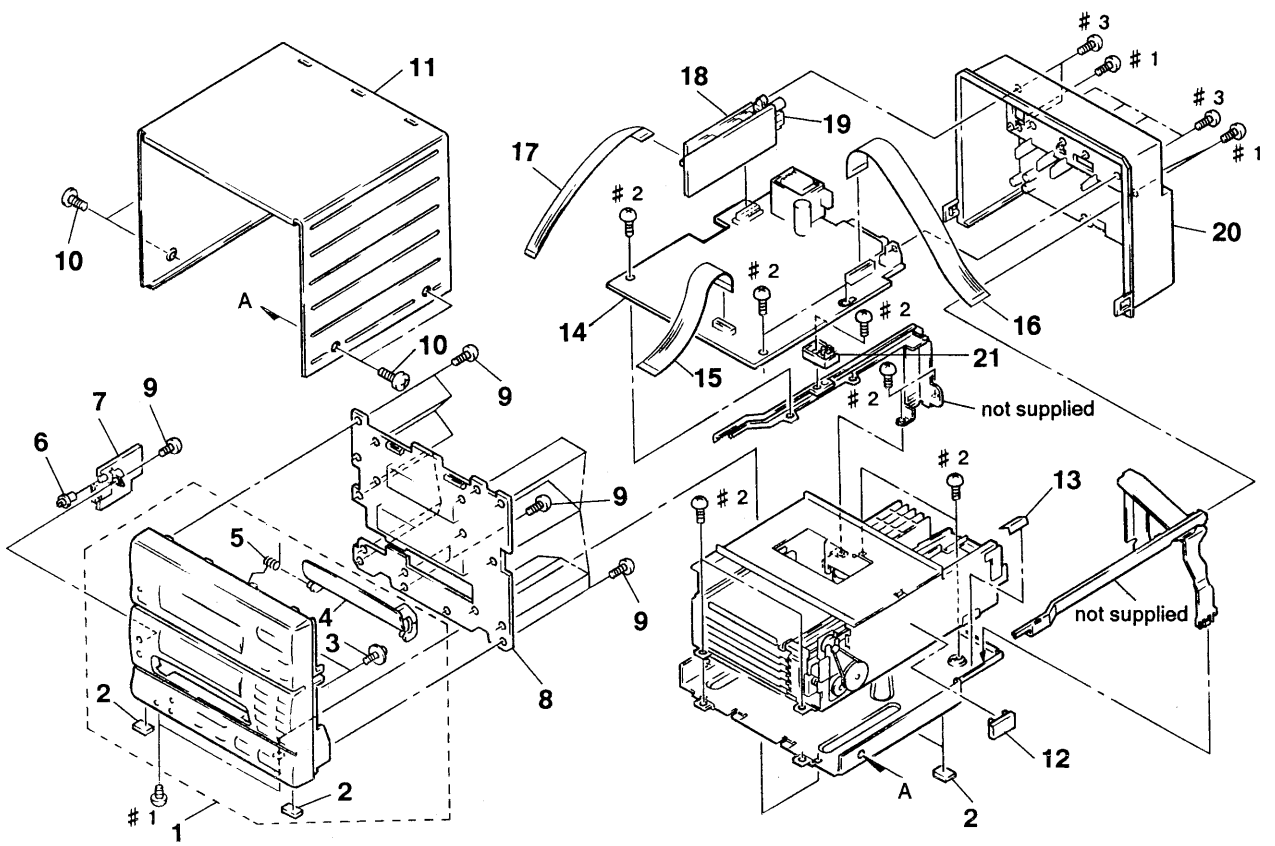

Ref. No.	Part No.	Description	Remark
1	X-4943-907-1	PANEL ASSY, FRONT (C70:US, CND)	
1	X-4943-908-1	PANEL ASSY, FRONT (C70:E, AUS, EA, SP, JE)	
1	X-4943-910-1	PANEL ASSY, FRONT (C90)	
1	X-4943-927-1	PANEL ASSY, FRONT (C70:AEP, UK, G, IT)	
2	4-930-336-31	FOOT (FELT)	
3	4-933-134-01	SCREW (+PTPWH M2.6X6)	
4	4-959-206-01	LID (LOADING)	
5	4-959-207-01	SPRING (CLOSE)	
6	4-932-882-11	KNOB (HP. VOL)	(C70:AEP, UK, E, AUS, G, IT, EA, SP, JE)
* 7	1-649-225-11	MICROPHONE BOARD	(C70:AEP, UK, E, AUS, G, IT, EA, SP, JE)
* 8	A-4365-203-A	PANEL BOARD, COMPLETE (C70:US, CND/C90)	
* 8	A-4365-204-A	PANEL BOARD, COMPLETE (C70:AEP, UK)	
* 8	A-4365-205-A	PANEL BOARD, COMPLETE	(C70:E, AUS, EA, SP, JE)
* 8	A-4365-206-A	PANEL BOARD, COMPLETE (C70:IT)	
* 8	A-4365-210-A	PANEL BOARD, COMPLETE (C70:G)	
9	4-951-620-01	SCREW (2.6X8), +BVTP	
10	3-363-099-01	SCREW (CASE 3 TP2)	
* 11	4-960-313-61	CASE	
* 12	4-962-178-01	HOLDER (FLEXIBLE)	
13	3-831-441-XX	CUSHION, SPEAKER	
* 14	A-4365-193-A	MAIN BOARD, COMPLETE (C70:US, CND/C90)	
* 14	A-4365-198-A	MAIN BOARD, COMPLETE (C70:AEP, UK)	
* 14	A-4365-200-A	MAIN BOARD, COMPLETE (C70:E, AUS, EA, SP, JE)	
* 14	A-4365-201-A	MAIN BOARD, COMPLETE (C70:G, IT)	
15	1-751-690-11	WIRE (FLAT TYPE) (21 CORE)	
16	1-751-659-11	WIRE (FLAT TYPE) (22 CORE)	
17	1-751-688-11	WIRE (FLAT TYPE) (13 CORE)	
* 18	1-649-358-11	TUNER BOARD (C70:US, CND, E, AUS, SP, JE/C90)	
* 18	1-649-359-11	TUNER BOARD (C70:AEP, UK, G, IT)	
* 19	A-4303-342-A	TCB011 BOARD, COMPLETE (C70:US, CND/C90)	
* 19	A-4303-343-A	TCB011 BOARD, COMPLETE (C70:AEP, UK)	
* 19	A-4303-344-A	TCB011 BOARD, COMPLETE (C70:G, IT)	
* 19	A-4303-345-A	TCB011 BOARD, COMPLETE	(C70:E, EA, AUS, JE, SP)
* 20	4-960-270-01	PANEL, BACK	(C70:US, CND, E, AUS, EA, SP, JE/C90)
* 20	4-960-270-11	PANEL, BACK (C70:AEP, UK, G, IT)	
* 21	4-962-179-02	HOLDER (PCB)	

7-2. CD MECHANISM SECTION 1 (CDM23B-5BD3)

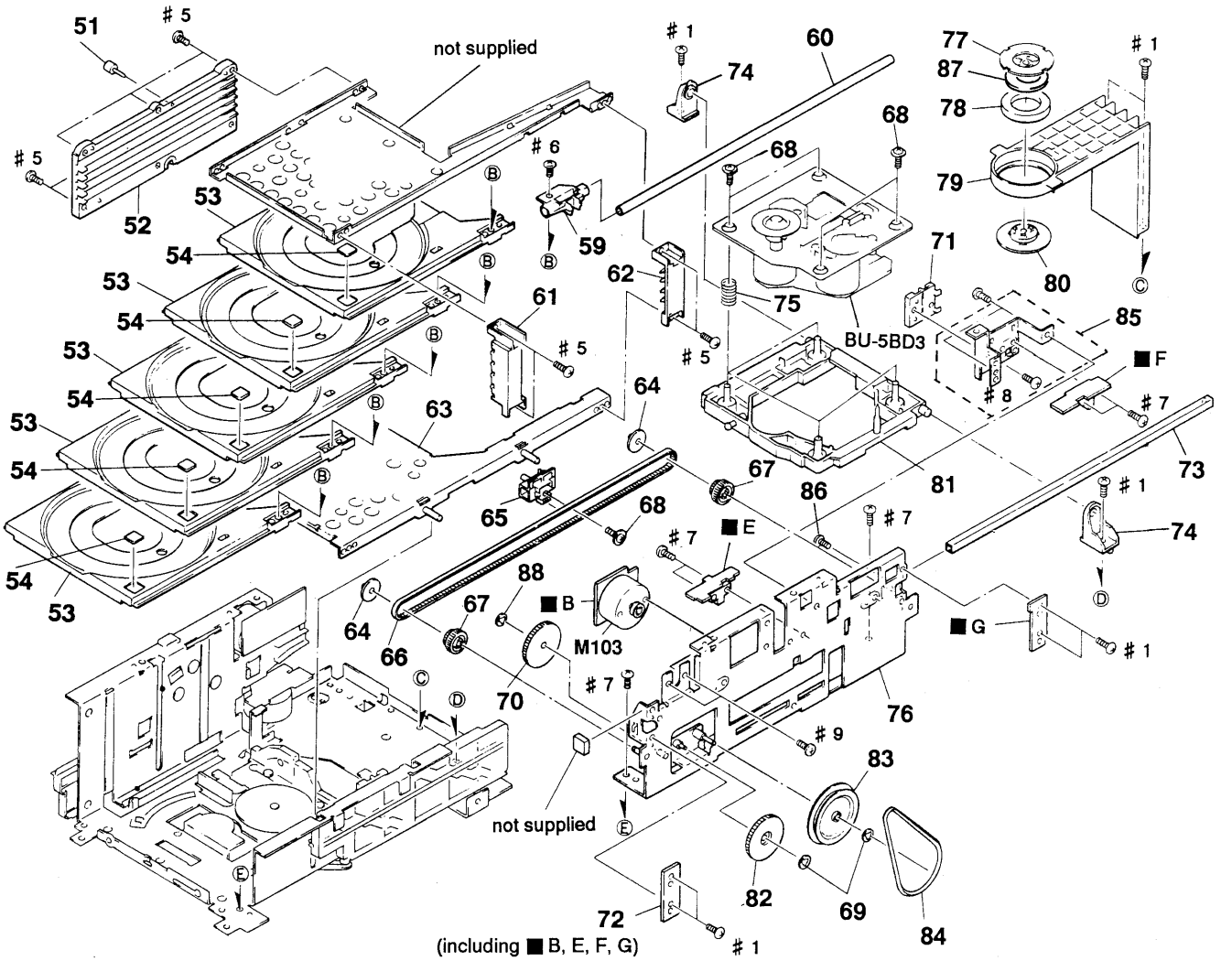

Ref. No.	Part No.	Description	Remark
51	4-954-649-01	SHAFT (ST-L)	
52	4-954-644-01	BRACKET (STOCKER L)	
53	4-954-638-01	TABLE, DISK	
54	4-954-651-01	EMBLEM (TABLE)	
55	4-954-651-11	EMBLEM (TABLE)	
56	4-954-651-21	EMBLEM (TABLE)	
57	4-954-651-31	EMBLEM (TABLE)	
58	4-954-651-41	EMBLEM (TABLE)	
59	4-954-639-01	GUIDE (TB)	
* 60	4-954-648-01	SHAFT (TABLE GUIDE)	
61	4-954-645-01	GUIDE (ST-RF)	
62	4-954-646-01	GUIDE (ST-RR)	
* 63	X-4942-943-1	BRACKET (ST-B) ASSY	
64	4-954-628-01	FLANGE (PULLEY)	
65	4-954-630-01	SLIDER (TB)	
66	4-954-634-01	BELT (SL)	
67	4-954-629-01	PULLEY (SL)	
68	4-933-134-01	SCREW (+PTPWH M2.6X6)	
69	3-669-595-00	WASHER (2), STOPPER	
70	4-954-627-01	GEAR (SL)	

Ref. No.	Part No.	Description	Remark
* 71	4-954-621-01	STOPPER (TB)	
* 72	1-645-607-11	CDM MOTOR BOARD (A-H)	
* 73	4-954-631-01	SHAFT (SL GUIDE)	
* 74	4-954-623-01	FULCRUM (BU)	
75	4-955-575-01	SPRING (BU), COMPRESSION	
* 76	X-4942-941-1	BRACKET (SL-A) ASSY	
77	4-929-762-01	YOKE, CHUCKING	
78	1-452-676-11	MAGNET	
79	4-954-650-01	HOLDER (MG)	
80	4-955-230-01	PULLEY (CHUCKING)	
* 81	X-4942-942-1	HOLDER (BU) ASSY	
82	4-954-625-01	GEAR (CDM)	
83	3-372-516-01	PULLEY (LOADING)	
84	4-954-624-01	BELT (CDM)	
* 85	A-4660-264-A	BRACKET (SL-B) ASSY	
* 86	4-955-890-01	SCREW (3X6)	
87	4-955-231-01	SPACER (MG)	
88	3-558-708-21	WASHER, STOPPER	
89	4-955-890-01	SCREW (3X6)	
M103	A-4660-232-A	MOTOR (CDM) ASSY (LOADING)	

7-3. CD MECHANISM SECTION 2 (CDM23B-5BD3)

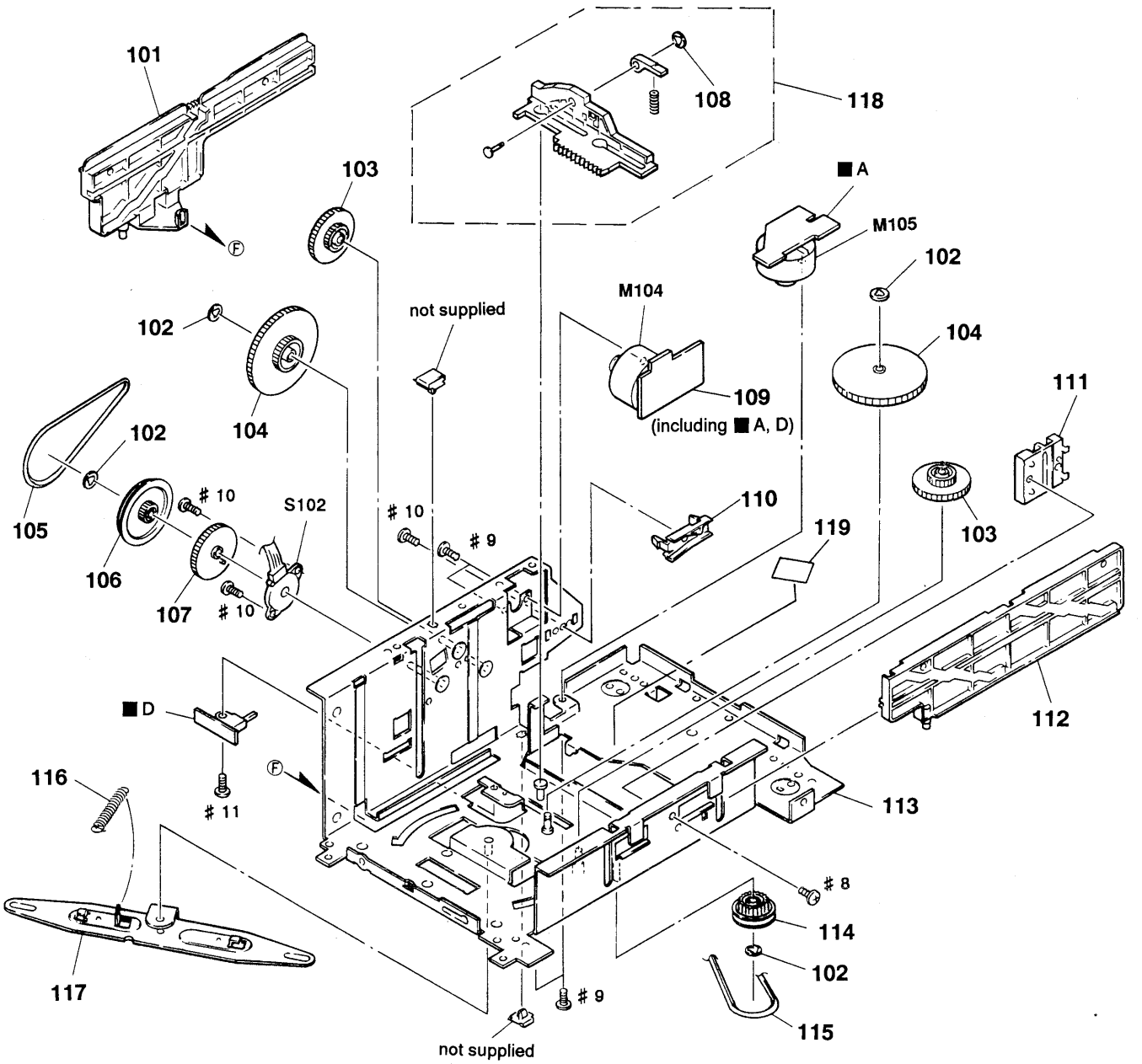

Ref. No.	Part No.	Description	Remark
101	X-4942-939-1	SLIDER (ST-L) ASSY	
102	3-558-708-21	WASHER, STOPPER	
103	4-954-625-01	GEAR (CDM)	
104	3-372-517-01	GEAR (LOADING)	
105	4-954-624-01	BELT (CDM)	
106	3-372-516-01	PULLEY (LOADING)	
107	4-954-636-01	GEAR (E)	
108	3-681-678-00	WASHER, SLIT	
* 109	1-645-607-11	CDM MOTOR BOARD (A-H)	
* 110	4-954-633-01	GUIDE (TB-LR)	
* 111	4-954-621-01	STOPPER (TB)	
112	X-4942-940-1	SLIDER (ST-R) ASSY	
* 113	X-4942-937-1	CHASSIS (CDM) ASSY	
114	4-954-637-01	PULLEY (BU)	
115	4-954-635-01	BELT (BU)	
116	4-955-168-01	SPRING, TENSION	
* 117	4-954-632-02	LEVER (JOINT)	
118	A-4660-167-A	SLIDER (BU CAM) ASSY	
119	4-928-473-01	INSULATOR	
M104	A-4660-232-A	MOTOR (CDM) ASSY (UP/DOWN)	
M105	A-4660-232-A	MOTOR (CDM) ASSY (CLAMP)	
S102	1-466-819-11	ENCODER, ROTARY	

7-4. OPTICAL PICK-UP SECTION (BU-5BD3)

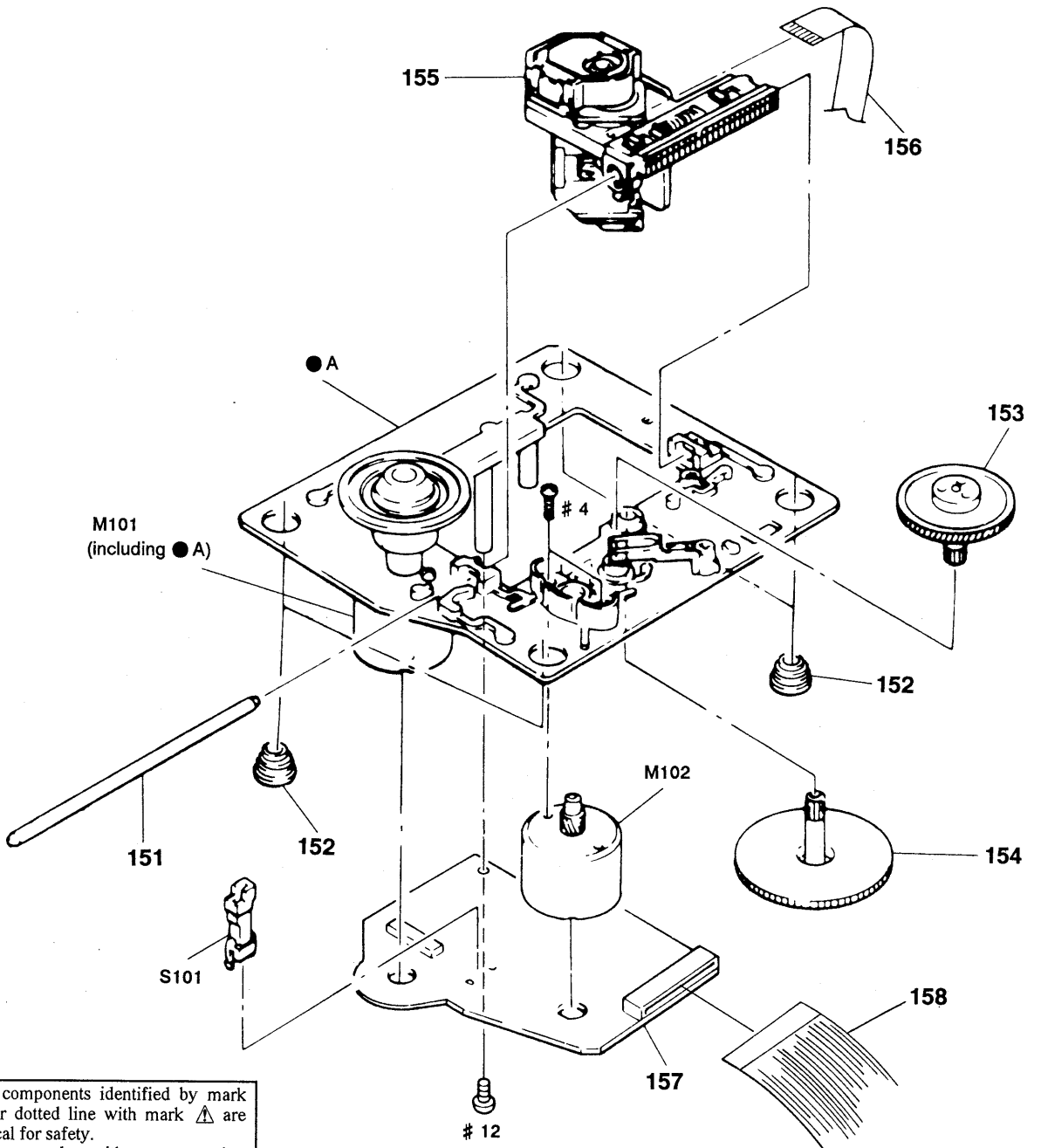

The components identified by mark ⚠ or dotted line with mark ⚠ are critical for safety. Replace only with part number specified.
Les composants identifiés par une marque ⚠ sont critiques pour la sécurité. Ne les remplacer que par une piéce portant le numéro spécifié.

Ref. No.	Part No.	Description	Remark
151	4-917-565-01	SHAFT, SLED	
152	4-933-126-01	INSULATOR (A)	
153	4-917-567-01	GEAR (M)	
154	4-917-564-01	GEAR (P), FLATNESS	
⚠155	8-848-144-11	DEVICE, OPTICAL KSS-240A	
156	1-575-001-11	WIRE, FLAT TYPE (12 CORE)	
* 157	A-4617-371-A	BD BOARD, COMPLETE	
158	1-751-597-11	WIRE (FLAT TYPE) (22 CORE)	
M101	X-4917-523-3	MOTOR ASSY, DISK (SPINDLE)	
M102	X-4917-504-1	MOTOR ASSY (SLED)	
S101	1-572-085-11	SWITCH LEAF (LIMIT)	

SECTION 8
ELECTRICAL PARTS LIST

BD

NOTE:

The components identified by mark ⚠ or dotted line with mark ⚠ are critical for safety.
Replace only with part number specified.

Les composants identifiés par une marque ⚠ sont critiques pour la sécurité.
Ne les remplacer que par une piéce portant le numéro spécifié.

When indicating parts by reference number, please include the board name.

- Due to standardization, replacements in the parts list may be different from the parts specified in the diagrams or the components used on the set.
- -XX, -X mean standardized parts, so they may have some difference from the original one.
- RESISTORS
  All resistors are in ohms
  METAL: Metal-film resistor
  METAL OXIDE: Metal Oxide-film resistor
  F : nonflammable
- Color Indication of Appearance Parts Example:
  KNOB, BALANCE (WHITE) . . . (RED)
  ↑ Parts color ↑ Cabinet's color
- Items marked "*" are not stocked since they are seldom required for routine service. Some delay should be anticipated when ordering these items.
- SEMICONDUCTORS
  In each case, u: μ , for example:
  uA...: μA..., uPA...: μPA..., uPB...: μPB..., uPC...: μPC..., uPD...: μPD...
- CAPACITORS
  uF : μF
- COILS
  uH : μH
- CND : Canadian model
- G : German model
- IT : Italian model
- EA : Saudi Arabia model
- AUS : Australian model
- SP : Singapore model
- JE : Tourist model
- Hardware (# mark) list is given in the last of this parts list.

Ref. No.	Part No.	Description				Remark
*	A-4617-371-A	BD BOARD, COMPLETE				
		**********				
		< CAPACITOR >				
C101	1-163-038-00	CERAMIC CHIP	0.1uF		25V	
C102	1-163-989-11	CERAMIC CHIP	0.033uF	10%	25V	
C103	1-126-163-11	ELECT	4.7uF	20%	50V	
C104	1-163-038-00	CERAMIC CHIP	0.1uF		25V	
C105	1-126-154-11	ELECT	47uF	20%	6.3V	
C106	1-126-154-11	ELECT	47uF	20%	6.3V	
C107	1-126-154-11	ELECT	47uF	20%	6.3V	
C108	1-163-038-00	CERAMIC CHIP	0.1uF		25V	
C109	1-163-038-00	CERAMIC CHIP	0.1uF		25V	
C110	1-163-989-11	CERAMIC CHIP	0.033uF	10%	25V	
C111	1-131-367-00	TANTALUM	22uF	10%	20V	
C112	1-164-232-11	CERAMIC CHIP	0.01uF		50V	
C113	1-164-232-11	CERAMIC CHIP	0.01uF		50V	
C114	1-164-161-11	CERAMIC CHIP	0.0022uF	10%	100V	
C115	1-164-161-11	CERAMIC CHIP	0.0022uF	10%	100V	
C117	1-163-038-00	CERAMIC CHIP	0.1uF		25V	
C118	1-163-038-00	CERAMIC CHIP	0.1uF		25V	
C119	1-164-161-11	CERAMIC CHIP	0.0022uF	10%	100V	
C120	1-163-989-11	CERAMIC CHIP	0.033uF	10%	25V	
C151	1-163-019-00	CERAMIC CHIP	0.0068uF	10%	50V	
C152	1-163-038-00	CERAMIC CHIP	0.1uF		25V	
C153	1-163-006-11	CERAMIC CHIP	560PF	10%	50V	
C154	1-164-161-11	CERAMIC CHIP	0.0022uF	10%	100V	
C155	1-163-023-00	CERAMIC CHIP	0.015uF	5%	50V	
C171	1-163-038-00	CERAMIC CHIP	0.1uF		25V	
C172	1-163-038-00	CERAMIC CHIP	0.1uF		25V	
C173	1-163-038-00	CERAMIC CHIP	0.1uF		25V	
C174	1-163-038-00	CERAMIC CHIP	0.1uF		25V	
		< CONNECTOR >				
CN101	1-568-796-11	SOCKET, CONNECTOR 22P				
CN102	1-568-795-11	SOCKET, CONNECTOR 12P				
		< IC >				
IC101	8-752-053-73	IC CXA1372AQ				
IC102	8-759-822-36	IC LA6532M				
		< JUMPER RESISTOR >				
JR101	1-216-295-00	METAL CHIP	0	5%	1/10W	
JR102	1-216-295-00	METAL CHIP	0	5%	1/10W	
		< MOTOR >				
M101	X-4917-523-3	MOTOR, DISK ASSY (SPINDLE)				
M102	X-4917-504-1	MOTOR, ASSY (SLED)				
		< TRANSISTOR >				
Q101	8-729-901-01	TRANSISTOR DTC144EK				
		< RESISTOR >				
R101	1-216-097-00	METAL CHIP	100K	5%	1/10W	
R102	1-216-095-00	METAL CHIP	82K	5%	1/10W	
R103	1-216-091-00	METAL CHIP	56K	5%	1/10W	
R104	1-216-099-00	METAL CHIP	120K	5%	1/10W	
R105	1-216-069-00	METAL CHIP	6.8K	5%	1/10W	
R106	1-216-061-00	METAL CHIP	3.3K	5%	1/10W	
R107	1-216-114-00	METAL GLAZE	510K	5%	1/10W	
R108	1-216-105-00	METAL CHIP	220K	5%	1/10W	
R109	1-216-061-00	METAL CHIP	3.3K	5%	1/10W	
R110	1-216-049-00	METAL CHIP	1K	5%	1/10W	
R111	1-216-049-00	METAL CHIP	1K	5%	1/10W	
R112	1-216-083-00	METAL CHIP	27K	5%	1/10W	
R113	1-216-071-00	METAL CHIP	8.2K	5%	1/10W	
R114	1-216-105-00	METAL CHIP	220K	5%	1/10W	
R152	1-216-073-00	METAL CHIP	10K	5%	1/10W	
R153	1-216-085-00	METAL CHIP	33K	5%	1/10W	
R154	1-216-085-00	METAL CHIP	33K	5%	1/10W	
R155	1-216-093-00	METAL CHIP	68K	5%	1/10W	
R156	1-216-081-00	METAL CHIP	22K	5%	1/10W	
R157	1-216-079-00	METAL CHIP	18K	5%	1/10W	
R158	1-216-079-00	METAL CHIP	18K	5%	1/10W	
R159	1-216-079-00	METAL CHIP	18K	5%	1/10W	
R160	1-216-049-00	METAL CHIP	1K	5%	1/10W	
R171	1-216-001-00	METAL CHIP	10	5%	1/10W	
R172	1-216-001-00	METAL CHIP	10	5%	1/10W	
R173	1-216-001-00	METAL CHIP	10	5%	1/10W	
R174	1-216-001-00	METAL CHIP	10	5%	1/10W	

BD CDM MOTOR MAIN

Ref. No.	Part No.	Description				Remark
		< VARIABLE RESISTOR >				
RV101	1-238-600-11	RES, ADJ, CARBON 10K				
RV102	1-238-600-11	RES, ADJ, CARBON 10K				
		< SWITCH >				
S101	1-572-085-11	SWITCH, LEAF (LIMIT IN)				
**********						
*	1-645-607-11	CDM MOTOR BOARD (A-H)				
		**********				
		< CAPACITOR >				
C101	1-164-159-11	CERAMIC	0.1uF		50V	
C102	1-164-159-11	CERAMIC	0.1uF		50V	
C103	1-164-159-11	CERAMIC	0.1uF		50V	
		< CONNECTOR >				
* CN105	1-568-934-11	PIN, CONNECTOR 7P				
* CN106	1-568-954-11	PIN, CONNECTOR 5P				
		< IC >				
IC401	8-759-071-52	IC ON1023-S				
IC601	8-759-071-52	IC ON1023-S				
		< MOTOR >				
M103	A-4660-232-A	MOTOR (CDM) ASSY (LOADING)				
M104	A-4660-232-A	MOTOR (CDM) ASSY (UP/DOWN)				
M105	A-4660-232-A	MOTOR (CDM) ASSY (CLAMP)				
		< RESISTOR >				
R401	1-247-811-31	CARBON	150	5%	1/4W	
R402	1-249-429-11	CARBON	10K	5%	1/4W	
R601	1-247-811-31	CARBON	150	5%	1/4W	
R602	1-249-429-11	CARBON	10K	5%	1/4W	
		< SWITCH >				
S101	1-571-300-21	SWITCH, ROTARY (BU UP/DOWN)				
S103	1-692-080-11	SWITCH, PUSH (1 KEY)(TRAY OUT)				
S104	1-692-080-11	SWITCH, PUSH (1 KEY)(TRAY IN)				
**********						

Ref. No.	Part No.	Description				Remark
*	A-4365-193-A	MAIN BOARD, COMPLETE (C70:US, CND/C90)				
		**********				
*	A-4365-198-A	MAIN BOARD, COMPLETE (C70:AEP, UK)				
		**********				
*	A-4365-200-A	MAIN BOARD, COMPLETE				
		**********				
						(C70:E, AUS, EA, SP, JE)
*	A-4365-201-A	MAIN BOARD, COMPLETE (C70:G, IT)				
		**********				
*	3-309-144-21	HEAT SINK				
*	4-870-539-00	PLATE, GROUND				
*	4-880-403-11	HEAT SINK				
	4-963-010-01	PLATE, SHIELD				
	7-682-548-04	SCREW +BVTT 3X8 (S)				
		< CAPACITOR >				
C101	1-124-119-00	ELECT	330uF	20%	16V	
C102	1-124-894-11	ELECT	6800uF	20%	16V	
C105	1-164-346-11	CERAMIC CHIP	1uF		16V	
C106	1-164-161-11	CERAMIC CHIP	0.0022uF	10%	100V	
C107	1-124-902-00	ELECT	0.47uF	20%	50V	
C108	1-124-443-00	ELECT	100uF	20%	10V	
C109	1-124-443-00	ELECT	100uF	20%	10V	
C110	1-163-038-00	CERAMIC CHIP	0.1uF		25V	
C111	1-126-101-11	ELECT	100uF	20%	16V	
C112	1-124-915-11	ELECT	10uF	20%	63V	
C113	1-124-915-11	ELECT	10uF	20%	63V	
C114	1-124-477-11	ELECT	47uF	20%	25V	
C117	1-124-915-11	ELECT	10uF	20%	63V	
C120	1-124-478-11	ELECT	100uF	20%	25V	
C121	1-124-478-11	ELECT	100uF	20%	25V	
C122	1-124-485-11	ELECT	330uF	20%	35V	
C123	1-126-101-11	ELECT	100uF	20%	16V	
C124	1-126-101-11	ELECT	100uF	20%	16V	
C125	1-124-915-11	ELECT	10uF	20%	63V	
C126	1-124-122-11	ELECT	100uF	20%	50V	
C127	1-163-038-00	CERAMIC CHIP	0.1uF		25V	
C128	1-163-038-00	CERAMIC CHIP	0.1uF		25V	
C129	1-163-038-00	CERAMIC CHIP	0.1uF		25V	
C130	1-163-038-00	CERAMIC CHIP	0.1uF		25V	
C131	1-124-915-11	ELECT	10uF	20%	63V	
C132	1-124-903-11	ELECT	1uF	20%	50V	
C133	1-124-903-11	ELECT	1uF	20%	50V	
C141	1-163-117-00	CERAMIC CHIP	100PF	5%	50V	
C142	1-163-117-00	CERAMIC CHIP	100PF	5%	50V	
C151	1-163-038-00	CERAMIC CHIP	0.1uF		25V	
C152	1-163-038-00	CERAMIC CHIP	0.1uF		25V	
C213	1-164-346-11	CERAMIC CHIP	1uF		16V	
C214	1-163-038-00	CERAMIC CHIP	0.1uF		25V	

Ref. No.	Part No.	Description			Remark
C215	1-163-038-00	CERAMIC CHIP	0.1uF		25V
C216	1-125-486-11	DOUBLE LAYERS	0.22F		5.5V
C217	1-163-038-00	CERAMIC CHIP	0.1uF		25V
C218	1-163-251-11	CERAMIC CHIP	100PF	5%	50V
C219	1-124-915-11	ELECT	10uF	20%	63V
C220	1-163-809-11	CERAMIC CHIP	0.047uF	10%	25V
C221	1-163-145-00	CERAMIC CHIP	0.0015uF	5%	50V
C222	1-164-346-11	CERAMIC CHIP	1uF		16V
C223	1-136-173-00	FILM	0.47uF	5%	50V
C224	1-136-153-00	FILM	0.01uF	5%	50V
C227	1-164-346-11	CERAMIC CHIP	1uF		16V
C228	1-163-038-00	CERAMIC CHIP	0.1uF		25V
C229	1-163-227-11	CERAMIC CHIP	10PF	0.5PF	50V
C230	1-163-227-11	CERAMIC CHIP	10PF	0.5PF	50V
C232	1-164-346-11	CERAMIC CHIP	1uF		16V
C233	1-164-346-11	CERAMIC CHIP	1uF		16V
C236	1-163-038-00	CERAMIC CHIP	0.1uF		25V
C237	1-163-038-00	CERAMIC CHIP	0.1uF		25V
C238	1-124-126-00	ELECT	47uF	20%	10V
C239	1-124-126-00	ELECT	47uF	20%	10V
C240	1-124-443-00	ELECT	100uF	20%	10V
C241	1-124-443-00	ELECT	100uF	20%	10V
C242	1-163-143-00	CERAMIC CHIP	0.0012uF	5%	50V
C243	1-163-143-00	CERAMIC CHIP	0.0012uF	5%	50V
C248	1-124-443-00	ELECT	100uF	20%	10V
C249	1-124-604-00	ELECT	330uF	20%	10V
C250	1-164-346-11	CERAMIC CHIP	1uF		16V
C253	1-126-176-11	ELECT	220uF	20%	10V
C254	1-124-902-00	ELECT	0.47uF	20%	50V
C255	1-126-101-11	ELECT	100uF	20%	16V
C256	1-124-925-11	ELECT	2.2uF	20%	100V
C257	1-124-925-11	ELECT	2.2uF	20%	100V
C258	1-124-915-11	ELECT	10uF	20%	63V
C259	1-124-915-11	ELECT	10uF	20%	63V
C260	1-124-915-11	ELECT	10uF	20%	63V
C261	1-124-915-11	ELECT	10uF	20%	63V
C262	1-124-915-11	ELECT	10uF	20%	63V
C263	1-124-915-11	ELECT	10uF	20%	63V
C270	1-124-126-00	ELECT	47uF	20%	10V
C271	1-124-604-00	ELECT	330uF	20%	10V
C272	1-163-038-00	CERAMIC CHIP	0.1uF		25V
C273	1-164-232-11	CERAMIC CHIP	0.01uF		50V
C274	1-163-038-00	CERAMIC CHIP	0.1uF		25V

Ref. No.	Part No.	Description	Remark
		< CONNECTOR >	
CN201	1-750-923-31	HOUSING, CONNECTOR(PC BOARD)15P	
* CN202	1-565-561-11	PIN, CONNECTOR 3P	(AU BUS)
CN203	1-569-495-11	SOCKET, CONNECTOR 9P	(SYSTEM CONTROL)
* CN205	1-568-934-11	PIN, CONNECTOR 7P	
CN206	1-506-468-11	PIN, CONNECTOR 3P	
CN207	1-506-468-11	PIN, CONNECTOR 3P	
* CN208	1-568-951-11	PIN, CONNECTOR 2P	
CN209	1-506-469-11	PIN, CONNECTOR 4P	
* CN210	1-573-264-11	PIN, CONNECTOR 5P	
* CN211	1-764-108-11	CONNECTOR, FFC 22P	
CN212	1-568-838-11	SOCKET, CONNECTOR 21P	
* CN213	1-564-338-00	PIN, CONNECTOR 4P	
			(C70:AEP, UK, E, AUS, G, IT, EA, SP, JE)
		< DIODE >	
D101	8-719-210-33	DIODE EC10DS2	
D102	8-719-210-33	DIODE EC10DS2	
D103	8-719-210-33	DIODE EC10DS2	
D104	8-719-210-33	DIODE EC10DS2	
D105	8-719-210-33	DIODE EC10DS2	
D106	8-719-210-33	DIODE EC10DS2	
D107	8-719-210-33	DIODE EC10DS2	
D108	8-719-210-33	DIODE EC10DS2	
D109	8-719-021-97	DIODE UZM11X	
D110	8-719-210-33	DIODE EC10DS2	
D111	8-719-016-06	DIODE UZP-30BB	
D112	8-719-015-02	DIODE UZP-8.2BB	
D113	8-719-014-42	DIODE UZP-4.3BA	
D114	8-719-800-76	DIODE 1SS226	
D115	8-719-800-76	DIODE 1SS226	
D116	8-719-990-39	DIODE DCB010	
D117	8-719-990-39	DIODE DCB010	
D118	8-719-210-33	DIODE EC10DS2	
D205	8-719-990-39	DIODE DCB010	
D206	8-719-210-33	DIODE EC10DS2	
D207	8-719-210-33	DIODE EC10DS2	
		< IC >	
IC101	8-759-636-24	IC M5290FP	
IC102	8-759-605-00	IC M5F78M07L	
IC103	8-759-158-62	IC TA78057S	
IC104	8-759-245-79	IC TA79005S	
IC105	8-759-009-06	IC MC14052BF	
IC106	8-749-921-12	IC GP1F32T (DIGITAL OPTICAL OUT)	
IC201	8-759-163-37	IC UPD75516GF-461-3B9	
IC202	8-752-352-93	IC CXD2500BQ	
IC203	8-759-098-27	IC MSM6538-01GS-VKR1	
IC204	8-759-155-52	IC PCM-67U-B	

MAIN

Ref. No.	Part No.	Description				Remark
IC205	8-759-636-55	IC	M5218AFP			
IC207	8-759-512-81	IC	LH5160N-10L			
IC208	8-759-009-21	IC	MC14093BF			
IC209	8-759-501-73	IC	BA6418N			
IC210	8-759-501-73	IC	BA6418N			
IC211	8-759-501-73	IC	BA6418N			
		< JUMPER RESISTOR >				
JW102	1-216-295-00	METAL CHIP	0	5%	1/10W	
		< COIL >				
L201	1-408-777-00	INDUCTOR CHIP	10uH			
L202	1-408-777-00	INDUCTOR CHIP	10uH			
L203	1-408-777-00	INDUCTOR CHIP	10uH			
		< TRANSISTOR >				
Q101	8-729-209-15	TRANSISTOR	2SD2012			
Q103	8-729-602-21	TRANSISTOR	2SC4154-F			
Q104	8-729-018-59	TRANSISTOR	2SB1375-LC			
Q105	8-729-106-68	TRANSISTOR	2SD1615A-GP			
Q106	8-729-141-83	TRANSISTOR	2SB1094-LK			
Q107	8-729-805-41	TRANSISTOR	2SC3398			
Q108	8-729-018-59	TRANSISTOR	2SB1375-LC			
Q109	8-729-602-21	TRANSISTOR	2SC4154-F			
Q110	8-729-018-59	TRANSISTOR	2SB1375-LC			
Q111	8-729-602-36	TRANSISTOR	2SA1602-F			
Q112	8-729-805-41	TRANSISTOR	2SC3398			
		< RESISTOR >				
R101	1-216-065-00	METAL CHIP	4.7K	5%	1/10W	
R102	1-216-065-00	METAL CHIP	4.7K	5%	1/10W	
R103	1-216-057-91	METAL GLAZE	2.2K	5%	1/10W	
R110	1-216-001-00	METAL CHIP	10	5%	1/10W	
⚠R111	1-217-637-00	FUSIBLE	1	5%	1/4W	F
R112	1-216-041-00	METAL CHIP	470	5%	1/10W	
R113	1-216-041-00	METAL CHIP	470	5%	1/10W	
R114	1-216-042-00	METAL CHIP	510	5%	1/10W	
R115	1-216-037-00	METAL CHIP	330	5%	1/10W	
R116	1-216-037-00	METAL CHIP	330	5%	1/10W	
R117	1-216-039-00	METAL CHIP	390	5%	1/10W	
R118	1-216-039-00	METAL CHIP	390	5%	1/10W	
R120	1-247-757-11	CARBON	2.7K	5%	1/2W	
R122	1-216-073-00	METAL CHIP	10K	5%	1/10W	
R123	1-216-073-00	METAL CHIP	10K	5%	1/10W	
R124	1-216-073-00	METAL CHIP	10K	5%	1/10W	
R125	1-216-049-00	METAL CHIP	1K	5%	1/10W	
R126	1-216-073-00	METAL CHIP	10K	5%	1/10W	
R127	1-216-073-00	METAL CHIP	10K	5%	1/10W	
R128	1-216-073-00	METAL CHIP	10K	5%	1/10W	
R129	1-216-049-00	METAL CHIP	1K	5%	1/10W	
R130	1-216-049-00	METAL CHIP	1K	5%	1/10W	
R131	1-216-073-00	METAL CHIP	10K	5%	1/10W	
R132	1-216-073-00	METAL CHIP	10K	5%	1/10W	
R133	1-216-025-00	METAL CHIP	100	5%	1/10W	
R134	1-216-025-00	METAL CHIP	100	5%	1/10W	
R135	1-216-073-00	METAL CHIP	10K	5%	1/10W	
R136	1-216-073-00	METAL CHIP	10K	5%	1/10W	
R137	1-216-025-00	METAL CHIP	100	5%	1/10W	
R140	1-216-049-00	METAL CHIP	1K	5%	1/10W	
R141	1-216-049-00	METAL CHIP	1K	5%	1/10W	
R142	1-247-757-11	CARBON	2.7K	5%	1/2W	
⚠R143	1-217-640-91	FUSIBLE	3.3	5%	1/4W	F
R147	1-216-049-00	METAL CHIP	100	5%	1/10W	
R202	1-216-061-00	METAL CHIP	3.3K	5%	1/10W	
R203	1-216-061-00	METAL CHIP	3.3K	5%	1/10W	
R204	1-216-061-00	METAL CHIP	3.3K	5%	1/10W	
R205	1-216-061-00	METAL CHIP	3.3K	5%	1/10W	
R206	1-216-073-00	METAL CHIP	10K	5%	1/10W	
R207	1-216-073-00	METAL CHIP	10K	5%	1/10W	
R208	1-216-073-00	METAL CHIP	10K	5%	1/10W	
R209	1-216-073-00	METAL CHIP	10K	5%	1/10W	
R210	1-216-073-00	METAL CHIP	10K	5%	1/10W	
R211	1-216-073-00	METAL CHIP	10K	5%	1/10W	
R212	1-216-073-00	METAL CHIP	10K	5%	1/10W	
R213	1-216-073-00	METAL CHIP	10K	5%	1/10W	
R214	1-216-073-00	METAL CHIP	10K	5%	1/10W	
R215	1-216-073-00	METAL CHIP	10K	5%	1/10W	
R216	1-216-073-00	METAL CHIP	10K	5%	1/10W	
R217	1-216-073-00	METAL CHIP	10K	5%	1/10W	
R218	1-216-073-00	METAL CHIP	10K	5%	1/10W	
R219	1-216-073-00	METAL CHIP	10K	5%	1/10W	
R220	1-216-073-00	METAL CHIP	10K	5%	1/10W	
R221	1-216-049-00	METAL CHIP	1K	5%	1/10W	
R222	1-216-073-00	METAL CHIP	10K	5%	1/10W	
R223	1-216-073-00	METAL CHIP	10K	5%	1/10W	
R224	1-216-073-00	METAL CHIP	10K	5%	1/10W	
R225	1-216-073-00	METAL CHIP	10K	5%	1/10W	
R226	1-216-073-00	METAL CHIP	10K	5%	1/10W	
R227	1-216-073-00	METAL CHIP	10K	5%	1/10W	
R228	1-216-073-00	METAL CHIP	10K	5%	1/10W	
R229	1-216-073-00	METAL CHIP	10K	5%	1/10W	
R230	1-216-073-00	METAL CHIP	10K	5%	1/10W	
R231	1-216-073-00	METAL CHIP	10K	5%	1/10W	
R232	1-216-073-00	METAL CHIP	10K	5%	1/10W	

The components identified by mark ⚠ or dotted line with mark ⚠ are critical for safety. Replace only with part number specified.	Les composants identifiés par une marque ⚠ sont critiques pour la sécurité. Ne les remplacer que par une piéce portant le numéro spécifié.

Ref. No.	Part No.	Description				Remark
R233	1-216-073-00	METAL CHIP	10K	5%	1/10W	
R234	1-216-073-00	METAL CHIP	10K	5%	1/10W	
R235	1-216-073-00	METAL CHIP	10K	5%	1/10W	
R236	1-216-073-00	METAL CHIP	10K	5%	1/10W	
R237	1-216-073-00	METAL CHIP	10K	5%	1/10W	
R238	1-216-049-00	METAL CHIP	1K	5%	1/10W	
R239	1-216-061-00	METAL CHIP	3.3K	5%	1/10W	
R240	1-216-061-00	METAL CHIP	3.3K	5%	1/10W	
R241	1-216-073-00	METAL CHIP	10K	5%	1/10W	
R242	1-216-073-00	METAL CHIP	10K	5%	1/10W	
R243	1-216-097-00	METAL CHIP	100K	5%	1/10W	
R244	1-216-041-00	METAL CHIP	470	5%	1/10W	
R245	1-216-041-00	METAL CHIP	470	5%	1/10W	
R246	1-216-041-00	METAL CHIP	470	5%	1/10W	
R247	1-216-041-00	METAL CHIP	470	5%	1/10W	
R248	1-216-033-00	METAL CHIP	220	5%	1/10W	
R249	1-216-041-00	METAL CHIP	470	5%	1/10W	
R250	1-216-041-00	METAL CHIP	470	5%	1/10W	
R251	1-216-041-00	METAL CHIP	470	5%	1/10W	
R252	1-216-041-00	METAL CHIP	470	5%	1/10W	
R253	1-216-041-00	METAL CHIP	470	5%	1/10W	
R254	1-216-045-00	METAL CHIP	680	5%	1/10W	
R255	1-216-045-00	METAL CHIP	680	5%	1/10W	
R256	1-216-057-91	METAL GLAZE	2.2K	5%	1/10W	
R257	1-216-057-91	METAL GLAZE	2.2K	5%	1/10W	
R262	1-216-025-00	METAL CHIP	100	5%	1/10W	
R263	1-216-025-00	METAL CHIP	100	5%	1/10W	
R264	1-216-031-00	METAL CHIP	180	5%	1/10W	
R265	1-216-031-00	METAL CHIP	180	5%	1/10W	
⚠R266	1-249-397-11	CARBON	22	5%	1/4W	F
⚠R267	1-249-397-11	CARBON	22	5%	1/4W	F
R268	1-216-049-00	METAL CHIP	1K	5%	1/10W	
R269	1-216-049-00	METAL CHIP	1K	5%	1/10W	
R270	1-216-049-00	METAL CHIP	1K	5%	1/10W	
R271	1-216-049-00	METAL CHIP	1K	5%	1/10W	
R272	1-216-049-00	METAL CHIP	1K	5%	1/10W	
R273	1-216-025-00	METAL CHIP	100	5%	1/10W	
R276	1-216-025-00	METAL CHIP	100	5%	1/10W	
R277	1-216-025-00	METAL CHIP	100	5%	1/10W	
R278	1-216-089-91	METAL GLAZE	47K	5%	1/10W	
R279	1-216-089-91	METAL GLAZE	47K	5%	1/10W	
		< TRANSFORMER >				
⚠T101	1-423-771-11	TRANSFORMER, POWER				
		< TEST PIN >				
* TP201	1-695-630-11	PIN, CONNECTOR 6P				

Ref. No.	Part No.	Description				Remark
		< VIBRATOR >				
X201	1-577-359-21	VIBRATOR, CERAMIC (4.19MHz)				
X202	1-579-280-11	VIBRATOR, CRYSTAL (16MHz)				
**********						
*	1-649-225-11	MICROPHONE BOARD				
		**********				
		(C70:AEP, UK, E, AUS, G, IT, EA, SP, JE)				
		< CAPACITOR >				
C501	1-124-257-00	ELECT	2.2uF	20%	50V	
C502	1-163-141-00	CERAMIC CHIP	0.001uF	5%	50V	
C503	1-163-121-00	CERAMIC CHIP	150PF	5%	50V	
C504	1-163-125-00	CERAMIC CHIP	220PF	5%	50V	
C505	1-124-464-11	ELECT	0.22uF	20%	50V	
C506	1-126-157-11	ELECT	10uF	20%	16V	
C507	1-124-907-11	ELECT	10uF	20%	50V	
C508	1-164-004-11	CERAMIC CHIP	0.1uF	10%	25V	
C555	1-124-464-11	ELECT	0.22uF	20%	50V	
C556	1-126-157-11	ELECT	10uF	20%	16V	
		< IC >				
IC501	8-759-603-13	IC M5218FP				
		< JACK >				
J501	1-562-837-21	JACK (MIX MIC)				
		< RESISTOR >				
R501	1-216-073-00	METAL CHIP	10K	5%	1/10W	
R502	1-216-049-00	METAL CHIP	1K	5%	1/10W	
R503	1-216-097-00	METAL CHIP	100K	5%	1/10W	
R504	1-216-049-00	METAL CHIP	1K	5%	1/10W	
R505	1-216-091-00	METAL CHIP	56K	5%	1/10W	
R506	1-216-033-00	METAL CHIP	220	5%	1/10W	
R507	1-216-073-00	METAL CHIP	10K	5%	1/10W	
R508	1-216-091-00	METAL CHIP	56K	5%	1/10W	
R509	1-216-097-00	METAL CHIP	100K	5%	1/10W	
R510	1-216-033-00	METAL CHIP	220	5%	1/10W	
R556	1-216-033-00	METAL CHIP	220	5%	1/10W	
		< VARIABLE RESISTOR >				
RV501	1-223-434-11	RES, VAR, CARBON 50K (MIC LEVEL)				
**********						

The components identified by mark ⚠ or dotted line with mark ⚠ are critical for safety. Replace only with part number specified.	Les composants identifiés par une marque ⚠ sont critiques pour la sécurité. Ne les remplacer que par une piéce portant le numéro spécifié.

PANEL

Ref. No.	Part No.	Description				Remark
*	A-4365-203-A	PANEL BOARD, COMPLETE (C70:US, CND/C90) **********				
*	A-4365-204-A	PANEL BOARD, COMPLETE (C70:AEP, UK) **********				
*	A-4365-205-A	PANEL BOARD, COMPLETE **********				(C70:E, AUS, EA, SP, JE)
*	A-4365-206-A	PANEL BOARD, COMPLETE (C70:IT) **********				
*	A-4365-210-A	PANEL BOARD, COMPLETE (C70:G) **********				
*	4-921-941-01	CUSHION (FL)				
*	4-954-701-01	HOLDER (FL TUBE)				
*	4-959-227-01	HOLDER, LED				
	4-959-581-01	COVER (SENSOR)				
*	4-960-269-01	HOLDER (FL)				
		< CAPACITOR >				
C603	1-164-695-11	CERAMIC CHIP	0.0022uF	5%	50V	
C604	1-165-319-11	CERAMIC CHIP	0.1uF		50V	
C606	1-163-083-00	CERAMIC CHIP	1PF		50V	
C607	1-163-117-00	CERAMIC CHIP	100PF	5%	50V	
C608	1-163-117-00	CERAMIC CHIP	100PF	5%	50V	
C609	1-163-117-00	CERAMIC CHIP	100PF	5%	50V	
C610	1-163-117-00	CERAMIC CHIP	100PF	5%	50V	
C611	1-163-117-00	CERAMIC CHIP	100PF	5%	50V	
C612	1-163-117-00	CERAMIC CHIP	100PF	5%	50V	
C613	1-163-117-00	CERAMIC CHIP	100PF	5%	50V	
C614	1-163-117-00	CERAMIC CHIP	100PF	5%	50V	
C615	1-163-117-00	CERAMIC CHIP	100PF	5%	50V	
C616	1-163-117-00	CERAMIC CHIP	100PF	5%	50V	
C617	1-163-117-00	CERAMIC CHIP	100PF	5%	50V	
C618	1-163-117-00	CERAMIC CHIP	100PF	5%	50V	
C619	1-163-117-00	CERAMIC CHIP	100PF	5%	50V	
C620	1-163-117-00	CERAMIC CHIP	100PF	5%	50V	
C621	1-163-117-00	CERAMIC CHIP	100PF	5%	50V	
C622	1-164-004-11	CERAMIC CHIP	0.1uF	10%	25V	
C623	1-164-232-11	CERAMIC CHIP	0.01uF		50V	
C624	1-124-443-00	ELECT	100uF	20%	10V	
C625	1-126-177-11	ELECT	100uF	20%	10V	
C626	1-163-117-00	CERAMIC CHIP	100PF	5%	50V	
C627	1-163-117-00	CERAMIC CHIP	100PF	5%	50V	
C628	1-126-948-11	ELECT	100uF	20%	50V	
C630	1-164-004-11	CERAMIC CHIP	0.1uF	10%	25V	
C631	1-126-157-11	ELECT	10uF	20%	16V	
C632	1-165-319-11	CERAMIC CHIP	0.1uF		50V	
C633	1-164-346-11	CERAMIC CHIP	1uF		16V	
C634	1-164-346-11	CERAMIC CHIP	1uF		16V	

Ref. No.	Part No.	Description				Remark
C701	1-126-177-11	ELECT	100uF	20%	10V	
C702	1-165-319-11	CERAMIC CHIP	0.1uF		50V	
C706	1-163-234-00	CERAMIC CHIP	20PF	5%	50V	
C707	1-163-234-00	CERAMIC CHIP	20PF	5%	50V	
C710	1-164-004-11	CERAMIC CHIP	0.1uF	10%	25V	
C711	1-126-157-11	ELECT	10uF	20%	16V	
C712	1-126-154-11	ELECT	47uF	20%	6.3V	
C713	1-136-173-00	FILM	0.47uF	5%	50V	
C714	1-136-173-00	FILM	0.47uF	5%	50V	
C715	1-136-173-00	FILM	0.47uF	5%	50V	
C717	1-163-251-11	CERAMIC CHIP	100PF	5%	50V	
C719	1-164-232-11	CERAMIC CHIP	0.01uF		50V	
C720	1-126-157-11	ELECT	10uF	20%	16V	
C721	1-165-319-11	CERAMIC CHIP	0.1uF		50V	
C722	1-126-157-11	ELECT	10uF	20%	16V	
C723	1-165-319-11	CERAMIC CHIP	0.1uF		50V	
C725	1-163-141-00	CERAMIC CHIP	0.001uF	5%	50V	
C726	1-164-004-11	CERAMIC CHIP	0.1uF	10%	25V	
C727	1-164-004-11	CERAMIC CHIP	0.1uF	10%	25V	
C728	1-164-004-11	CERAMIC CHIP	0.1uF	10%	25V	
C729	1-164-004-11	CERAMIC CHIP	0.1uF	10%	25V	
		< CERAMIC FILTER >				
CF701	1-579-125-11	VIBRATOR, CERAMIC (8MHz)				
		< CONNECTOR >				
* CN601	1-568-864-11	SOCKET, CONNECTOR 21P				
* CN602	1-568-856-11	SOCKET, CONNECTOR 13P				
		< DIODE >				
D601	8-719-990-39	DIODE	DCB010			
D620	8-719-045-13	DIODE	SEL2910A-TP6 (DISC 4)			
D621	8-719-045-13	DIODE	SEL2910A-TP6 (DISC 3)			
D622	8-719-045-13	DIODE	SEL2910A-TP6 (DISC 2)			
D623	8-719-045-13	DIODE	SEL2910A-TP6 (DISC 1)			
D624	8-719-045-13	DIODE	SEL2910A-TP6 (DISC 5)			
D625	8-719-041-92	DIODE	SEL2410E-C-TP6 (DISC 4)			
D626	8-719-041-92	DIODE	SEL2410E-C-TP6 (DISC 3)			
D627	8-719-041-92	DIODE	SEL2410E-C-TP6 (DISC 2)			
D628	8-719-041-92	DIODE	SEL2410E-C-TP6 (DISC 1)			
D629	8-719-041-92	DIODE	SEL2410E-C-TP6 (DISC 5)			
D630	8-719-029-95	DIODE	TLN117			
D701	8-719-990-39	DIODE	DCB010			
D702	8-719-990-39	DIODE	DCB010			
D703	8-719-990-39	DIODE	DCB010			
D704	8-719-990-39	DIODE	DCB010			
D706	8-719-990-39	DIODE	DCB010 (C70:US, CND, IT/C90)			
D707	8-719-990-39	DIODE	DCB010 (C70:AEP, UK, IT)			
D708	8-719-990-39	DIODE	DCB010 (C70:E, AUS, G, EA, SP, JE)			
D710	8-719-038-63	DIODE	SEL5220S-TH8C (PRESET)			

Ref. No.	Part No.	Description	Remark
D711	8-719-038-63	DIODE SEL5220S-TH8C (TUNING)	
D712	8-719-990-39	DIODE DCB010	
D716	8-719-990-39	DIODE DCB010	
D717	8-719-990-39	DIODE DCB010	
D718	8-719-990-39	DIODE DCB010	
		< FLUORESCENT INDICATOR >	
FL601	1-519-738-11	INDICATOR TUBE, FLUORESCENT	
FL701	1-517-215-11	INDICATOR TUBE, FLUORESCENT	
		< IC >	
IC601	8-759-184-09	IC 75518GF-127-3B9	
IC602	8-759-077-16	IC M66004M4FP	
IC603	8-759-165-81	IC PST600D-T	
IC701	8-759-183-99	IC TMP87CC70F-6129	
IC702	8-759-504-12	IC X24C01S	
IC703	8-759-165-81	IC PST600D-T	
IC704	8-759-165-84	IC PST600G-T	
IC705	8-749-923-80	IC GP1U90XB	
		< COIL >	
L601	1-410-521-11	INDUCTOR 100uH	
L701	1-410-521-11	INDUCTOR 100uH	
L702	1-410-521-11	INDUCTOR 100uH	
L703	1-410-521-11	INDUCTOR 100uH	
		< TRANSISTOR >	
Q601	8-729-602-21	TRANSISTOR 2SC4154-F	
Q604	8-729-018-23	TRANSISTOR TPS626	
Q612	8-729-602-21	TRANSISTOR 2SC4154-F	
Q613	8-729-602-21	TRANSISTOR 2SC4154-F	
Q701	8-729-805-41	TRANSISTOR 2SC3398	
Q702	8-729-805-41	TRANSISTOR 2SC3398	
Q706	8-729-805-41	TRANSISTOR 2SC3398	
Q707	8-729-602-21	TRANSISTOR 2SC4154-F	
		< RESISTOR >	
R601	1-216-061-00	METAL CHIP 3.3K 5% 1/10W	
R602	1-216-061-00	METAL CHIP 3.3K 5% 1/10W	
R603	1-216-061-00	METAL CHIP 3.3K 5% 1/10W	
R604	1-216-061-00	METAL CHIP 3.3K 5% 1/10W	
R605	1-216-073-00	METAL CHIP 10K 5% 1/10W	
R606	1-216-073-00	METAL CHIP 10K 5% 1/10W	
R607	1-216-073-00	METAL CHIP 10K 5% 1/10W	
R608	1-216-073-00	METAL CHIP 10K 5% 1/10W	
R609	1-216-073-00	METAL CHIP 10K 5% 1/10W	
R610	1-216-073-00	METAL CHIP 10K 5% 1/10W	
R611	1-216-073-00	METAL CHIP 10K 5% 1/10W	
R612	1-216-089-91	METAL GLAZE 47K 5% 1/10W	
R613	1-216-073-00	METAL CHIP 10K 5% 1/10W	
R614	1-216-073-00	METAL CHIP 10K 5% 1/10W	
R615	1-216-061-00	METAL CHIP 3.3K 5% 1/10W	
R617	1-216-061-00	METAL CHIP 3.3K 5% 1/10W	
R618	1-216-061-00	METAL CHIP 3.3K 5% 1/10W	
R619	1-216-061-00	METAL CHIP 3.3K 5% 1/10W	
R620	1-216-033-00	METAL CHIP 220 5% 1/10W	
R621	1-216-033-00	METAL CHIP 220 5% 1/10W	
R622	1-216-033-00	METAL CHIP 220 5% 1/10W	
R623	1-216-033-00	METAL CHIP 220 5% 1/10W	
R624	1-216-033-00	METAL CHIP 220 5% 1/10W	
R625	1-216-035-00	METAL CHIP 270 5% 1/10W	
R626	1-216-035-00	METAL CHIP 270 5% 1/10W	
R627	1-216-035-00	METAL CHIP 270 5% 1/10W	
R628	1-216-035-00	METAL CHIP 270 5% 1/10W	
R629	1-216-035-00	METAL CHIP 270 5% 1/10W	
R632	1-216-065-00	METAL CHIP 4.7K 5% 1/10W	
R633	1-216-073-00	METAL CHIP 10K 5% 1/10W	
R635	1-216-049-00	METAL CHIP 1K 5% 1/10W	
R636	1-216-049-00	METAL CHIP 1K 5% 1/10W	
R637	1-216-079-00	METAL CHIP 18K 5% 1/10W	
R638	1-216-109-91	METAL GLAZE 330K 5% 1/10W	
R651	1-216-041-00	METAL CHIP 470 5% 1/10W	
R652	1-216-041-00	METAL CHIP 470 5% 1/10W	
R653	1-216-081-00	METAL CHIP 22K 5% 1/10W	
R654	1-216-041-00	METAL CHIP 470 5% 1/10W	
R655	1-216-045-00	METAL CHIP 680 5% 1/10W	
R656	1-216-045-00	METAL CHIP 680 5% 1/10W	
R657	1-216-037-00	METAL CHIP 330 5% 1/10W	
R658	1-216-045-00	METAL CHIP 680 5% 1/10W	
R659	1-216-049-00	METAL CHIP 1K 5% 1/10W	
R660	1-216-049-00	METAL CHIP 1K 5% 1/10W	
R661	1-216-033-00	METAL CHIP 220 5% 1/10W	
R662	1-216-049-00	METAL CHIP 1K 5% 1/10W	
R663	1-216-053-00	METAL CHIP 1.5K 5% 1/10W	
R664	1-216-053-00	METAL CHIP 1.5K 5% 1/10W	
R666	1-216-053-00	METAL CHIP 1.5K 5% 1/10W	
R667	1-216-057-91	METAL GLAZE 2.2K 5% 1/10W	
R668	1-216-057-91	METAL GLAZE 2.2K 5% 1/10W	
R670	1-216-057-91	METAL GLAZE 2.2K 5% 1/10W	
R671	1-216-065-00	METAL CHIP 4.7K 5% 1/10W	
R672	1-216-065-00	METAL CHIP 4.7K 5% 1/10W	
R674	1-216-065-00	METAL CHIP 4.7K 5% 1/10W	
R675	1-216-075-00	METAL CHIP 12K 5% 1/10W	
R676	1-216-075-00	METAL CHIP 12K 5% 1/10W	
R678	1-216-075-00	METAL CHIP 12K 5% 1/10W	
R701	1-216-049-00	METAL CHIP 1K 5% 1/10W	
R702	1-216-049-00	METAL CHIP 1K 5% 1/10W	
R703	1-216-049-00	METAL CHIP 1K 5% 1/10W	
R704	1-216-049-00	METAL CHIP 1K 5% 1/10W	
R705	1-216-049-00	METAL CHIP 1K 5% 1/10W	

PANEL TCB011

Ref. No.	Part No.	Description				Remark
R706	1-216-061-00	METAL CHIP	3.3K	5%	1/10W	
R707	1-216-061-00	METAL CHIP	3.3K	5%	1/10W	
R708	1-216-057-91	METAL GLAZE	2.2K	5%	1/10W	
R709	1-216-061-00	METAL CHIP	3.3K	5%	1/10W	
R710	1-216-073-00	METAL CHIP	10K	5%	1/10W	
R711	1-216-073-00	METAL CHIP	10K	5%	1/10W	
R712	1-216-037-00	METAL CHIP	330	5%	1/10W	
R716	1-216-073-00	METAL CHIP	10K	5%	1/10W	
R717	1-216-065-00	METAL CHIP	4.7K	5%	1/10W	
R718	1-216-073-00	METAL CHIP	10K	5%	1/10W	
R719	1-216-073-00	METAL CHIP	10K	5%	1/10W	
R720	1-216-073-00	METAL CHIP	10K	5%	1/10W	
R721	1-216-073-00	METAL CHIP	10K	5%	1/10W	
R723	1-216-061-00	METAL CHIP	3.3K	5%	1/10W	
R724	1-216-073-00	METAL CHIP	10K	5%	1/10W	
R725	1-216-049-00	METAL CHIP	1K	5%	1/10W	
R726	1-216-049-00	METAL CHIP	1K	5%	1/10W	
R727	1-216-049-00	METAL CHIP	1K	5%	1/10W	
R728	1-216-049-00	METAL CHIP	1K	5%	1/10W	
R729	1-216-049-00	METAL CHIP	1K	5%	1/10W	
R730	1-216-049-00	METAL CHIP	1K	5%	1/10W	
R736	1-216-073-00	METAL CHIP	10K	5%	1/10W	
R739	1-216-025-00	METAL CHIP	100	5%	1/10W	
R740	1-216-105-00	METAL CHIP	220K	5%	1/10W	
R741	1-216-109-91	METAL GLAZE	330K	5%	1/10W	

< SWITCH >

Ref. No.	Part No.	Description	Remark
S601	1-554-303-21	SWITCH, TACTILE (▷▷I, ▶▶)	
S602	1-554-303-21	SWITCH, TACTILE (◀◀, I◁◁)	
S603	1-554-303-21	SWITCH, TACTILE (■)	
S604	1-554-303-21	SWITCH, TACTILE (I▷)	
S605	1-554-303-21	SWITCH, TACTILE (DISC 1)	
S606	1-554-303-21	SWITCH, TACTILE (OPEN/CLOSE ⏏ (1))	
S608	1-554-303-21	SWITCH, TACTILE (❚❚)	
S609	1-554-303-21	SWITCH, TACTILE (DISC 2)	
S610	1-554-303-21	SWITCH, TACTILE (⏏ (2))	
S612	1-554-303-21	SWITCH, TACTILE (CONTINUE)	
S613	1-554-303-21	SWITCH, TACTILE (DISC 3)	
S614	1-554-303-21	SWITCH, TACTILE (⏏ (3))	
S616	1-554-303-21	SWITCH, TACTILE (SHUFFLE)	
S617	1-554-303-21	SWITCH, TACTILE (DISC 4)	
S618	1-554-303-21	SWITCH, TACTILE (⏏ (4))	
S620	1-554-303-21	SWITCH, TACTILE (PROGRAM)	
S621	1-554-303-21	SWITCH, TACTILE (DISC 5)	
S622	1-554-303-21	SWITCH, TACTILE (⏏ (5) DISC CHECK)	
S624	1-554-303-21	SWITCH, TACTILE (REPEAT)	
S625	1-554-303-21	SWITCH, TACTILE (CHARACTER ▷)	
S626	1-554-303-21	SWITCH, TACTILE (CHARACTER ◁)	
S628	1-554-303-21	SWITCH, TACTILE (CURSOR)	
S629	1-554-303-21	SWITCH, TACTILE (MEMO INPUT)	
S630	1-554-303-21	SWITCH, TACTILE (ERASE)	
S631	1-554-303-21	SWITCH, TACTILE (TIME/MEMO)	
S632	1-554-303-21	SWITCH, TACTILE (S.F. FILE)	
S701	1-554-303-21	SWITCH, TACTILE (WAKE UP TIMER 1)	
S702	1-554-303-21	SWITCH, TACTILE (WAKE UP TIMER 2)	
S703	1-554-303-21	SWITCH, TACTILE (TUNER REC)	
S705	1-554-303-21	SWITCH, TACTILE (MEMORY/NEXT)	
S706	1-554-303-21	SWITCH, TACTILE (MODE)	
S707	1-554-303-21	SWITCH, TACTILE (STEREO/MONO)	
S708	1-554-303-21	SWITCH, TACTILE (BAND)	
S709	1-554-303-21	SWITCH, TACTILE (-)	
S710	1-554-303-21	SWITCH, TACTILE (+)	

< VIBRATOR >

Ref. No.	Part No.	Description	Remark
X601	1-577-359-21	VIBRATOR, CERAMIC (4.19MHz)	
X701	1-567-098-00	OSCILLATOR, CRYSTAL (32kHz)	

****

Ref. No.	Part No.	Description	Remark
*	A-4303-342-A	TCB011 BOARD, COMPLETE (C70:US, CND/C90)	
		**********	
*	A-4303-343-A	TCB011 BOARD, COMPLETE (C70:AEP, UK)	
		**********	
*	A-4303-344-A	TCB011 BOARD, COMPLETE (C70:G, IT)	
		**********	
*	A-4303-345-A	TCB011 BOARD, COMPLETE	
		**********	
			(C70:E, EA, AUS, JE, SP)

< CAPACITOR >

Ref. No.	Part No.	Description				Remark
C1	1-124-120-11	ELECT	220uF	20%	25V	
C2	1-164-232-11	CERAMIC CHIP	0.01uF		50V	
C3	1-163-009-11	CERAMIC CHIP	0.001uF	10%	50V	
C4	1-163-038-00	CERAMIC CHIP	0.1uF		25V	(C70:G, IT)
C5	1-164-232-11	CERAMIC CHIP	0.01uF		50V	
C6	1-163-038-00	CERAMIC CHIP	0.1uF		25V	(C70:AEP, UK, G, IT)
C7	1-163-038-00	CERAMIC CHIP	0.1uF		25V	(C70:G, IT)
C8	1-164-232-11	CERAMIC CHIP	0.01uF		50V	(C70:AEP, UK, G, IT)
C9	1-163-012-00	CERAMIC CHIP	0.0018uF	10%	50V	(C70:AEP, UK, G, IT)
C10	1-163-011-11	CERAMIC CHIP	0.0015uF	10%	50V	(C70:AEP, UK, G, IT)
C12	1-164-343-91	CERAMIC CHIP	0.056uF	10%	50V	(C70:E, AUS, EA, SP, JE)
C13	1-164-232-11	CERAMIC CHIP	0.01uF		50V	(C70:E, AUS, EA, SP, JE)

Ref. No.	Part No.	Description	Remark
C14	1-163-577-91	CERAMIC CHIP 5PF 0.25PF 50V	(C70:E, AUS, EA, SP, JE)
C21	1-163-103-00	CERAMIC CHIP 27PF 5% 50V	
C22	1-163-103-00	CERAMIC CHIP 27PF 5% 50V	
C23	1-164-232-11	CERAMIC CHIP 0.01uF 50V	
C24	1-164-232-11	CERAMIC CHIP 0.01uF 50V	
C25	1-164-232-11	CERAMIC CHIP 0.01uF 50V	
C26	1-164-346-11	CERAMIC CHIP 1uF 16V	
C27	1-164-505-11	CERAMIC CHIP 2.2uF 16V	
C29	1-164-232-11	CERAMIC CHIP 0.01uF 50V	
C31	1-164-505-11	CERAMIC CHIP 2.2uF 16V	
C32	1-164-232-11	CERAMIC CHIP 0.01uF 50V	
C33	1-163-038-00	CERAMIC CHIP 0.1uF 25V	
C34	1-164-005-11	CERAMIC CHIP 0.47uF 25V	(C70:AEP, UK, G, IT)
C35	1-163-033-00	CERAMIC CHIP 0.022uF 50V	(C70:AEP, UK, G, IT)
C36	1-163-033-00	CERAMIC CHIP 0.022uF 50V	(C70:AEP, UK, G, IT)
C51	1-164-232-11	CERAMIC CHIP 0.01uF 50V	
C52	1-123-613-91	ELECT 3.3uF 35V	(C70:US, CND, E, AUS, EA, SP, JE/C90)
C52	1-164-505-11	CERAMIC CHIP 2.2uF 16V	(C70:AEP, UK, G, IT)
C53	1-164-232-11	CERAMIC CHIP 0.01uF 50V	
C54	1-164-232-11	CERAMIC CHIP 0.01uF 50V	
C55	1-163-105-00	CERAMIC CHIP 33PF 5% 50V	(C70:US, CND, AEP, UK, E, AUS, EA, SP, JE/C90)
C55	1-163-135-00	CERAMIC CHIP 560PF 5% 50V	(C70:G, IT)
C56	1-163-117-00	CERAMIC CHIP 100PF 5% 50V	(C70:G, IT)
C57	1-164-346-11	CERAMIC CHIP 1uF 16V	
C58	1-164-346-11	CERAMIC CHIP 1uF 16V	
C59	1-164-346-11	CERAMIC CHIP 1uF 16V	
C60	1-163-038-00	CERAMIC CHIP 0.1uF 25V	
C61	1-163-022-00	CERAMIC CHIP 0.012uF 10% 50V	(C70:AEP, UK, E, AUS, G, IT, EA, SP, JE)
C61	1-163-032-00	CERAMIC CHIP 0.015uF 50V	(C70:US, CND/C90)
C62	1-163-022-00	CERAMIC CHIP 0.012uF 10% 50V	(C70:AEP, UK, E, AUS, G, IT, EA, SP, JE)
C62	1-163-032-00	CERAMIC CHIP 0.015uF 50V	(C70:US, CND/C90)
C63	1-164-346-11	CERAMIC CHIP 1uF 16V	
C64	1-164-346-11	CERAMIC CHIP 1uF 16V	
C65	1-164-346-11	CERAMIC CHIP 1uF 16V	
C66	1-164-346-11	CERAMIC CHIP 1uF 16V	
C69	1-164-232-11	CERAMIC CHIP 0.01uF 50V	
C70	1-164-232-11	CERAMIC CHIP 0.01uF 50V	
C71	1-164-232-11	CERAMIC CHIP 0.01uF 50V	
C72	1-124-120-11	ELECT 220uF 20% 25V	
C73	1-164-505-11	CERAMIC CHIP 2.2uF 16V	
C74	1-164-232-11	CERAMIC CHIP 0.01uF 50V	
C75	1-126-157-11	ELECT 10uF 20% 16V	
C76	1-126-101-11	ELECT 100uF 20% 16V	
C79	1-126-157-11	ELECT 10uF 20% 16V	
C80	1-124-472-11	ELECT 470uF 20% 10V	
C81	1-164-232-11	CERAMIC CHIP 0.01uF 50V	
C82	1-164-232-11	CERAMIC CHIP 0.01uF 50V	
C83	1-164-232-11	CERAMIC CHIP 0.01uF 50V	(C70:G, IT)
		< CERAMIC FILTER >	
CF1	1-527-968-11	FILTER, CERAMIC (10.7MHz)	(C70:E, AUS, EA, SP, JE)
CF1	1-567-389-11	FILTER, CERAMIC (10.7MHz)	(C70:AEP, UK, G, IT)
CF1	1-579-675-11	FILTER, CERAMIC (10.7MHz)	(C70:US, CND/C90)
CF2	1-567-389-11	FILTER, CERAMIC (10.7MHz)	(C70:G, IT)
CF51	1-579-675-11	FILTER, CERAMIC (10.7MHz)	(C70:US, CND/C90)
CF51	1-567-389-11	FILTER, CERAMIC (10.7MHz)	(C70:AEP, UK, E, AUS, G, IT, EA, SP, JE)
		< CONNECTOR >	
CN1	1-573-105-11	CONNECTOR, PC BOARD (RECEPTACLE) 4P	
CN2	1-573-105-11	CONNECTOR, PC BOARD (RECEPTACLE) 4P	
CN3	1-573-105-11	CONNECTOR, PC BOARD (RECEPTACLE) 4P	(C70:US, CND/C90)
CN3	1-659-808-11	CONNECTOR, PC BOARD (RECEPTACLE) 8P	(C70:AEP, UK, E, AUS, G, IT, EA, SP, JE)
CN4	1-573-105-11	CONNECTOR, PC BOARD (RECEPTACLE) 4P	(C70:US, CND/C90)
CN5	1-573-105-11	CONNECTOR, PC BOARD (RECEPTACLE) 4P	
		< TRIMER >	
CV1	1-141-265-31	TRIMER CAPACITOR (C70:E)	
CV2	1-141-265-31	TRIMER CAPACITOR (C70:E)	
		< DIODE >	
D1	8-719-975-10	DIODE KV1560NT (C70:E)	
D21	8-719-422-46	DIODE MA8056	
D51	8-719-016-74	DIODE 1SS352	
		< FRONTEND >	
FE1	1-465-673-11	FRONTEND (FM 2 BAND) (FM)	(C70:US, CND, AEP, UK, E, AUS, EA, SP, JE/C90)
FE1	1-463-957-11	FRONTEND (FM 4 BAND) (FM)	(C70:G, IT)
FE2	1-239-030-11	ENCAPSULATED COMPONENT (MW)	(C70:AEP, UK, G, IT)
FE2	1-239-031-11	ENCAPSULATED COMPONENT (AM)	(C70:US, CND/C90)

Ref. No.	Part No.	Description	Remark
FE2	1-239-032-11	ENCAPSULATED COMPONENT (MW)	(C70:US, CND, E, AUS, EA, SP, JE/C90)
FE3	1-239-049-11	ENCAPSULATED COMPONENT (LW)	(C70:AEP, UK, G, IT)
		< FILTER >	
FL51	1-239-029-11	ENCAPSULATED COMPONENT (C70:G, IT)	
		< IC >	
IC21	8-759-821-43	IC LC7218M	
IC51	8-759-823-68	IC LA1851NM	
		< IFT >	
IFT51	1-404-954-11	TRANSFORMER, DISCRIMINATOR (FM DET)	
IFT52	1-404-713-11	TRANSFORMER, IF (MW/LW IF)	
		< JUMPER RESISTOR >	
JW1	1-216-295-00	METAL CHIP 0 5% 1/10W	
JW2	1-216-295-00	METAL CHIP 0 5% 1/10W	(C70:US, CND, AEP, UK, E, AUS, EA, SP, JE/C90)
JW3	1-216-295-00	METAL CHIP 0 5% 1/10W	(C70:E, AUS, EA, SP, JE)
JW4	1-216-295-00	METAL CHIP 0 5% 1/10W	(C70:US, CND, AEP, UK, G, IT/C90)
JW5	1-216-295-00	METAL CHIP 0 5% 1/10W	(C70:US, CND, AEP, UK, G, IT/C90)
JW6	1-216-295-00	METAL CHIP 0 5% 1/10W	(C70:US, CND/C90)
JW7	1-216-295-00	METAL CHIP 0 5% 1/10W	(C70:AEP, UK, G, IT)
		< COIL >	
L1	1-408-793-21	INDUCTOR CHIP 220uH	(C70:AEP, UK, G, IT)
L51	1-408-798-00	INDUCTOR CHIP 1mH	
		< LPF >	
LPF51	1-235-221-00	FILTER, LOW PASS	
		< TRANSISTOR >	
Q1	8-729-804-72	TRANSISTOR 2SC2814-F4	
Q2	8-729-804-72	TRANSISTOR 2SC2814-F4	(C70:G, IT)
Q3	8-729-810-16	TRANSISTOR 2SA1678	
Q4	8-729-602-36	TRANSISTOR 2SA1602	(C70:AEP, UK, E, AUS, G, IT, EA, SP, JE)
Q5	8-729-602-36	TRANSISTOR 2SA1602	(C70:E, AUS, EA, SP, JE)
Q5	8-729-810-28	TRANSISTOR 2SC4398	(C70:AEP, UK, G, IT)
Q6	8-729-602-36	TRANSISTOR 2SA1602	(C70:AEP, UK, E, AUS, G, IT, EA, SP, JE)
Q7	8-729-810-28	TRANSISTOR 2SC4398	(C70:AEP, UK, G, IT)
Q21	8-729-602-21	TRANSISTOR 2SC4154-F	
Q22	8-729-232-69	TRANSISTOR 2SK208GR3	
Q23	8-729-232-59	TRANSISTOR 2SC4666B	
Q24	8-729-232-69	TRANSISTOR 2SK208GR3	(C70:AEP, UK, G, IT)
Q25	8-729-232-59	TRANSISTOR 2SC4666B	(C70:AEP, UK, G, IT)
Q51	8-729-602-21	TRANSISTOR 2SC4154-F	
Q52	8-729-602-21	TRANSISTOR 2SC4154-F	
Q53	8-729-810-28	TRANSISTOR 2SC4398	
		< RESISTOR >	
R1	1-216-037-00	METAL CHIP 330 5% 1/10W	
R2	1-216-037-00	METAL CHIP 330 5% 1/10W	
R3	1-216-109-00	METAL CHIP 330K 5% 1/10W	
R4	1-216-037-00	METAL CHIP 330 5% 1/10W	
R5	1-216-109-00	METAL CHIP 330K 5% 1/10W	(C70:G, IT)
R6	1-216-037-00	METAL CHIP 330 5% 1/10W	(C70:G, IT)
R7	1-216-025-00	METAL CHIP 100 5% 1/10W	
R8	1-216-037-00	METAL CHIP 330 5% 1/10W	(C70:E, AUS, EA, SP, JE)
R8	1-216-057-00	METAL CHIP 2.2K 5% 1/10W	(C70:AEP, UK, G, IT)
R9	1-216-089-00	METAL CHIP 47K 5% 1/10W	
R10	1-216-097-00	METAL CHIP 100K 5% 1/10W	
R11	1-216-065-00	METAL CHIP 4.7K 5% 1/10W	(C70:AEP, UK, G, IT)
R12	1-216-057-00	METAL CHIP 2.2K 5% 1/10W	(C70:AEP, UK, G, IT)
R13	1-216-089-00	METAL CHIP 47K 5% 1/10W	(C70:AEP, UK, G, IT)
R14	1-216-081-00	METAL CHIP 22K 5% 1/10W	(C70:AEP, UK, G, IT)
R15	1-216-121-00	METAL CHIP 1M 5% 1/10W	(C70:AEP, UK, G, IT)
R16	1-216-073-00	METAL CHIP 10K 5% 1/10W	(C70:E, AUS, EA, SP, JE)
R16	1-216-089-00	METAL CHIP 47K 5% 1/10W	(C70:AEP, UK)
R17	1-216-121-00	METAL CHIP 1M 5% 1/10W	(C70:E, AUS, EA, SP, JE)
R18	1-216-073-00	METAL CHIP 10K 5% 1/10W	(C70:E, AUS, EA, SP, JE)
R21	1-216-049-00	METAL CHIP 1K 5% 1/10W	
R22	1-216-049-00	METAL CHIP 1K 5% 1/10W	
R23	1-216-049-00	METAL CHIP 1K 5% 1/10W	
R24	1-216-025-00	METAL CHIP 100 5% 1/10W	
R25	1-216-065-00	METAL CHIP 4.7K 5% 1/10W	
R26	1-216-049-00	METAL CHIP 1K 5% 1/10W	
R27	1-216-073-00	METAL CHIP 10K 5% 1/10W	(C70:AEP, UK, E, AUS, G, IT, EA, SP, JE)
R28	1-216-073-00	METAL CHIP 10K 5% 1/10W	
R29	1-216-025-00	METAL CHIP 100 5% 1/10W	
R30	1-216-061-00	METAL CHIP 3.3K 5% 1/10W	

Ref. No.	Part No.	Description	Remark
R31	1-216-043-00	METAL CHIP 560 5% 1/10W	
R32	1-216-049-00	METAL CHIP 1K 5% 1/10W	
R33	1-216-035-00	METAL CHIP 270 5% 1/10W	
R34	1-216-065-00	METAL CHIP 4.7K 5% 1/10W	
R35	1-216-057-00	METAL CHIP 2.2K 5% 1/10W	
R36	1-216-065-00	METAL CHIP 4.7K 5% 1/10W	
R37	1-216-065-00	METAL CHIP 4.7K 5% 1/10W	
R38	1-216-025-00	METAL CHIP 100 5% 1/10W	
R39	1-216-061-00	METAL CHIP 3.3K 5% 1/10W	(C70:AEP, UK, G, IT)
R40	1-216-043-00	METAL CHIP 560 5% 1/10W	(C70:AEP, UK, G, IT)
R41	1-216-049-00	METAL CHIP 1K 5% 1/10W	(C70:AEP, UK, G, IT)
R42	1-216-035-00	METAL CHIP 270 5% 1/10W	(C70:AEP, UK, G, IT)
R43	1-216-081-00	METAL CHIP 22K 5% 1/10W	(C70:AEP, UK, G, IT)
R44	1-216-057-00	METAL CHIP 2.2K 5% 1/10W	(C70:AEP, UK, G, IT)
R45	1-216-065-00	METAL CHIP 4.7K 5% 1/10W	(C70:AEP, UK, G, IT)
R46	1-216-065-00	METAL CHIP 4.7K 5% 1/10W	(C70:AEP, UK, G, IT)
R47	1-216-025-00	METAL CHIP 100 5% 1/10W	(C70:US, CND, E, AUS, EA, SP, JE/C90)
R51	1-216-049-00	METAL CHIP 1K 5% 1/10W	
R52	1-216-081-00	METAL CHIP 22K 5% 1/10W	
R53	1-216-085-00	METAL CHIP 33K 5% 1/10W	
R54	1-216-071-00	METAL CHIP 8.2K 5% 1/10W	
R55	1-216-075-00	METAL CHIP 12K 5% 1/10W	(C70:US, CND, AEP, UK, E, AUS, EA, SP, JE/C90)
R56	1-216-075-00	METAL CHIP 12K 5% 1/10W	(C70:G, IT)
R57	1-216-073-00	METAL CHIP 10K 5% 1/10W	
R58	1-216-066-00	METAL CHIP 5.1K 5% 1/10W	
R59	1-216-065-00	METAL CHIP 4.7K 5% 1/10W	
R60	1-216-065-00	METAL CHIP 4.7K 5% 1/10W	
R61	1-216-115-00	METAL CHIP 560K 5% 1/10W	
R62	1-216-115-00	METAL CHIP 560K 5% 1/10W	
R63	1-216-049-00	METAL CHIP 1K 5% 1/10W	
R64	1-216-049-00	METAL CHIP 1K 5% 1/10W	
R65	1-216-073-00	METAL CHIP 10K 5% 1/10W	
R66	1-216-073-00	METAL CHIP 10K 5% 1/10W	
R67	1-216-057-00	METAL CHIP 2.2K 5% 1/10W	
R68	1-216-057-00	METAL CHIP 2.2K 5% 1/10W	
R69	1-216-025-00	METAL CHIP 100 5% 1/10W	
R70	1-216-025-00	METAL CHIP 100 5% 1/10W	
R71	1-216-089-00	METAL CHIP 47K 5% 1/10W	
R72	1-216-073-00	METAL CHIP 10K 5% 1/10W	
R73	1-216-073-00	METAL CHIP 10K 5% 1/10W	
R74	1-216-013-00	METAL CHIP 33 5% 1/10W	
R75	1-216-061-00	METAL CHIP 3.3K 5% 1/10W	(C70:AEP, UK, G, IT)
R79	1-216-049-00	METAL CHIP 1K 5% 1/10W	(C70:US, CND, AEP, UK, E, AUS, EA, SP, JE/C90)
R79	1-216-055-00	METAL CHIP 1.8K 5% 1/10W	(C70:G, IT)
		< VARIABLE RESISTOR >	
RV51	1-238-601-11	RES, ADJ, CARBON 22K	(MW/LW TUNED IND. LEVEL)
RV52	1-238-601-11	RES, ADJ, CARBON 22K	(FW TUNED IND. LEVEL)
		< COIL >	
T1	1-402-547-11	COIL (ANT FOR SW3)	(C70:E, AUS, EA, SP, JE)
T2	1-406-415-11	COIL (OSC FOR SW3)	(C70:E, AUS, EA, SP, JE)
		< TEST PIN >	
* TP51	1-564-336-00	PIN, CONNECTOR 2P	(C70:US, CND, AEP, UK, E, AUS, EA, SP, JE/C90)
* TP51	1-568-449-11	HOUSING, CONNECTOR (PC BOARD) 3P	(C70:G, IT)
		< VIBRATOR >	
X21	1-577-126-11	VIBRATOR, CRYSTAL (7.2MHz)	
X51	1-577-075-11	OSCILLATOR, CERAMIC (456kHz)	
**********			
*	1-649-358-11	TUNER BOARD **********	(C70:US, CND, E, AUS, EA, SP, JE/C90)
*	1-649-359-11	TUNER BOARD (C70:AEP, UK, G, IT) **********	
		< CONNECTOR >	
* CN301	1-568-856-11	SOCKET, CONNECTOR 13P	
* CN302	1-691-007-11	CONNECTOR (PC BOARD) (PLUG) 4P	
* CN303	1-691-007-11	CONNECTOR (PC BOARD) (PLUG) 4P	
CN304	1-764-187-11	PIN, CONNECTOR	
* CN305	1-691-007-11	CONNECTOR (PC BOARD) (PLUG) 4P	
* CN307	1-569-504-11	PIN, CONNECTOR 9P	
		< TERMINAL >	
* TM301	1-537-288-11	TERMINAL BOARD, ANTENNA (PAL) (ANTENNA)	(C70:AEP, UK, G, IT)
TM301	1-537-466-11	TERMINAL BOARD (ANT) (ANTENNA)	(C70:US, CND, E, AUS, EA, SP, JE/C90)
**********			

Ref. No.	Part No.	Description	Remark
		MISCELLANEOUS **********	
15	1-751-690-11	WIRE (FLAT TYPE) (21 CORE)	
16	1-751-659-11	WIRE (FLAT TYPE) (22 CORE)	
17	1-751-688-11	WIRE (FLAT TYPE) (13 CORE)	
⚠155	8-848-144-11	DEVICE, OPTICAL KSS-240A	
156	1-575-001-11	WIRE, FLAT TYPE (12 CORE)	
158	1-751-597-11	WIRE (FLAT TYPE) (22 CORE)	
M101	X-4917-523-3	MOTOR ASSY, DISK (SPINDLE)	
M102	X-4917-504-1	MOTOR ASSY (SLED)	
M103	A-4660-232-A	MOTOR (CDM) ASSY (LOADING)	
M104	A-4660-232-A	MOTOR (CDM) ASSY (UP/DOWN)	
M105	A-4660-232-A	MOTOR (CDM) ASSY (CLAMP)	
S101	1-572-085-11	SWITCH LEAF (LIMIT)	
S102	1-466-819-11	ENCODER, ROTARY	

****

ACCESSORIES & PACKING MATERIALS
****

	1-467-258-11	REMOTE COMMANDER (C70:AEP, G, IT)	
	1-501-374-11	ANTENNA, LOOP (C70:AEP, G, IT)	
	1-501-594-11	ANTENNA (FM) (C70:AEP, G, IT)	
⚠	1-575-131-11	CORD, POWER (C70:AEP, G, IT)	
	1-751-469-11	CORD (WITH CONNECTOR) (C70:AEP, G, IT)	
	3-372-531-01	SCREW (C), TRANSPORT	
	3-757-494-11	MANUAL, INSTRUCTION (ENGLISH) (AEP)	
	3-757-494-41	MANUAL, INSTRUCTION (FRENCH, SPANISH, SWEDISH, PORTUGUESE, DUTCH) (AEP)	
	3-757-494-51	MANUAL, INSTRUCTION (GERMAN, ITALIAN) (AEP, G, IT)	
	3-707-584-21	COVER (MLY), BATTERY (COMMANDER) (C70:AEP, G, IT)	
*	4-960-930-01	INDIVIDUAL CARTON (C70:AEP, G, IT)	
*	4-960-933-01	CUSHION (H) (FRONT) (C70:AEP, G, IT)	
*	4-960-934-01	CUSHION (H) (REAR) (C70:AEP, G, IT)	

****

Ref. No.	Part No.	Description	Remark
		********** HARDWARE LIST **********	
#1	7-682-547-09	SCREW +BVTT 3X6 (S)	
#2	7-685-870-01	SCREW +BVTT 3X5 (S)	
#3	7-685-647-79	SCREW +BVTP 3X10 TYPE2 N-S	
#4	7-685-531-14	SCREW +BTP 2.6X4 TYPE2 N-S	
#5	7-621-770-XX	SCREW +PTT 2.6X8 (S)	
#6	7-685-533-19	SCREW +BTP 2.6X6 TYPE2 N-S	
#7	7-682-546-09	SCREW +PTT 3X5 (S)	
#9	7-621-775-00	SCREW +B 2.6X3	
#8	7-685-645-79	SCREW +BTP 3X6 TYPE2 N-S	
#10	7-685-131-19	SCREW +BTP 2.6X4 TYPE2 N-S	
#11	7-621-773-95	SCREW +BVTT 2.6X6 (S)	
#12	7-685-134-19	SCREW +BTP 2.6X8 TYPE2 N-S	

The components identified by mark ⚠ or dotted line with mark ⚠ are critical for safety. Replace only with part number specified.	Les composants identifiés par une marque ⚠ sont critiques pour la sécurité. Ne les remplacer que par une piéce portant le numéro spécifié.

9-959-101-11

Sony Corporation
Audio Group

English
93H09101-1
Printed in Japan
© 1993.8
Published by Audio Sector Quality Assurance Dept.